M-13267 | 1

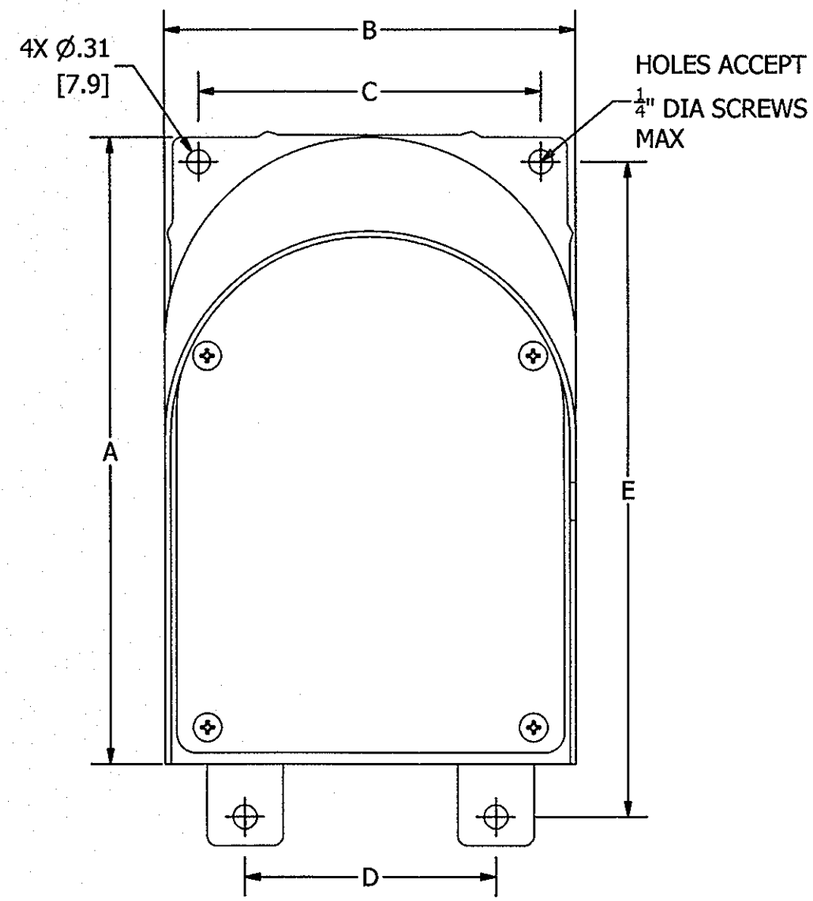

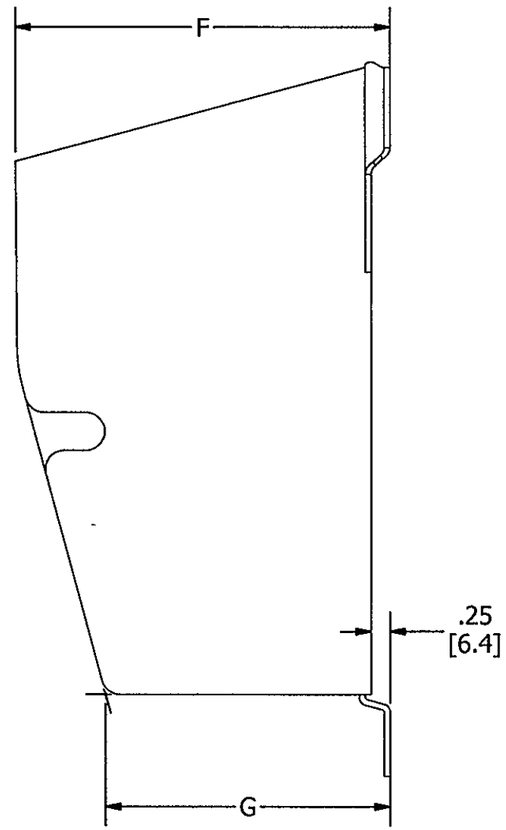

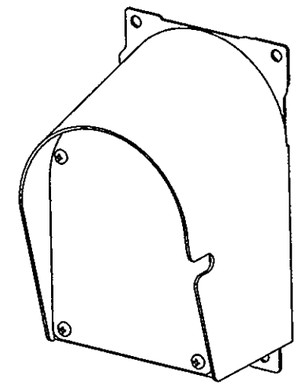

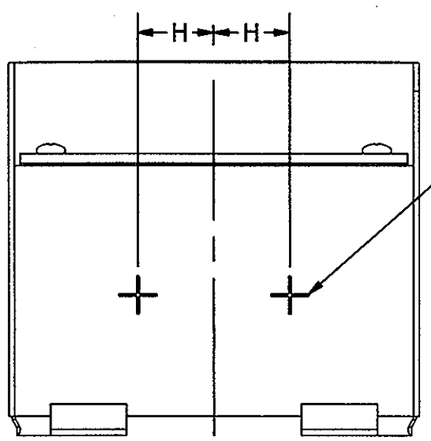

DRILL SPOTS FOR $\frac{3}{4}$" NPT CONDUIT FITTING,
BOTTOM FEED ONLY
INSTALLER TO DRILL OR PUNCH

NOTES:
1. DIMENSIONS SHOWN ARE IN INCHES [mm].
2. ENCLOSURE TYPE 3, 3R, 3X, 3RX, 4, 4X, & 12.
3. cULus LISTED.

CATALOG NUMBERS	A	B	C	D	E	F	G	H
HBLDSSRNK3	8.22 [208.8]	5.41 [137.3]	4.50 [114.3]	3.30 [83.8]	8.60 [218.3]	4.92 [125.0]	3.74 [95.0]	1.00 [25.4]
HBLDSSRNK6	11.17 [283.7]	7.66 [194.6]	6.45 [163.8]	5.50 [139.7]	11.41 [289.7]	6.10 [155.1]	4.92 [125.1]	1.50 [38.1]

LIST OF PARTS

DESCRIPTION	MATERIAL	FINISH
ENCLOSURE & HARDWARE	STAINLESS STEEL	
GASKET	EPDM FOAM	

DIMENSION SHEET FOR CAT. NO.
SEE NOTES

REPAIRABLE ☐ NON-REPAIRABLE ☒

SYM	DESCRIPTION	APPROVED	DATE
1	INITIAL RELEASE PER DCN# 21913 JZW	PJB	1/22/16

THE DESIGN AND DIMENSIONS OF THE PRODUCT SHOWN ON THIS DRAWING ARE SUBJECT TO CHANGE WITHOUT NOTICE

TITLE
SS SLOPED BLANK ENCLOSURE

TOLERANCES UNLESS OTHERWISE SPECIFIED
.xx = ± .01
.xxx = ± .005
ANGLES = ± 2°

WIRING DEVICE-KELLEMS
HUBBELL INCORPORATED
SHELTON, CT

DR. BY	JZW	APP. BY	PJB
TR. BY		SCALE	NONE
CHK'D BY	PJB	DATE	1/22/2016

B
M-13267
1

CODE 74545