| M-13365 | 1 |
|---|---|

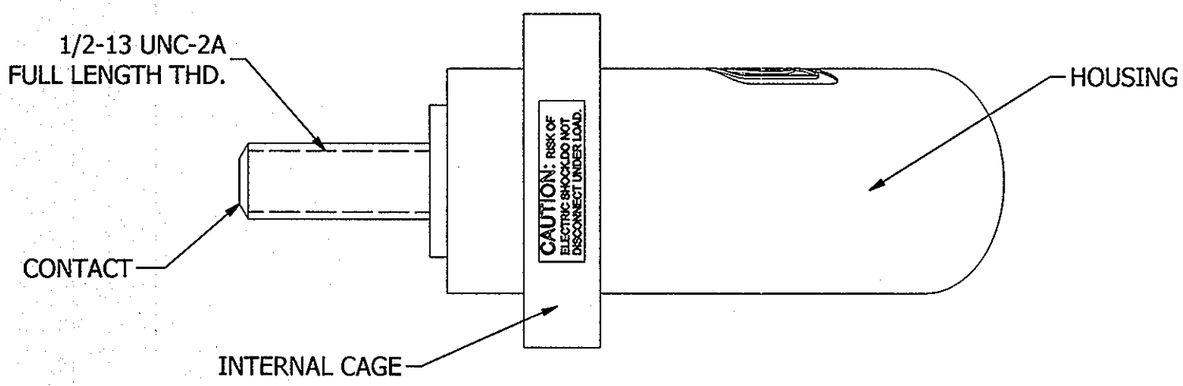


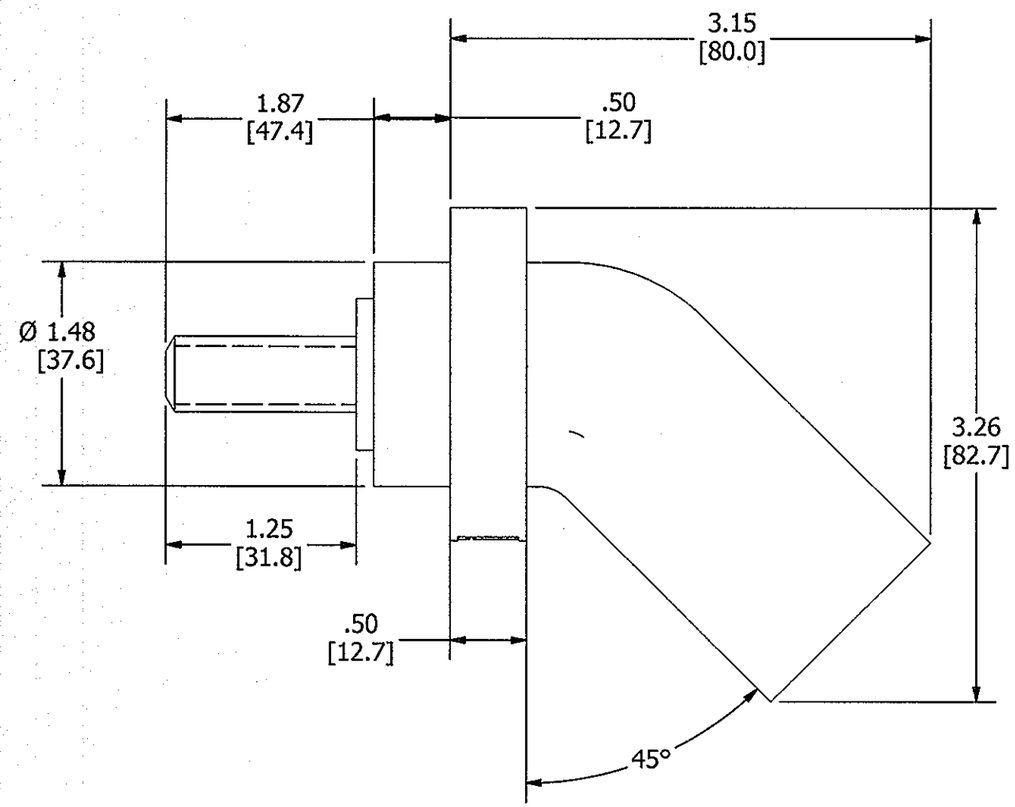


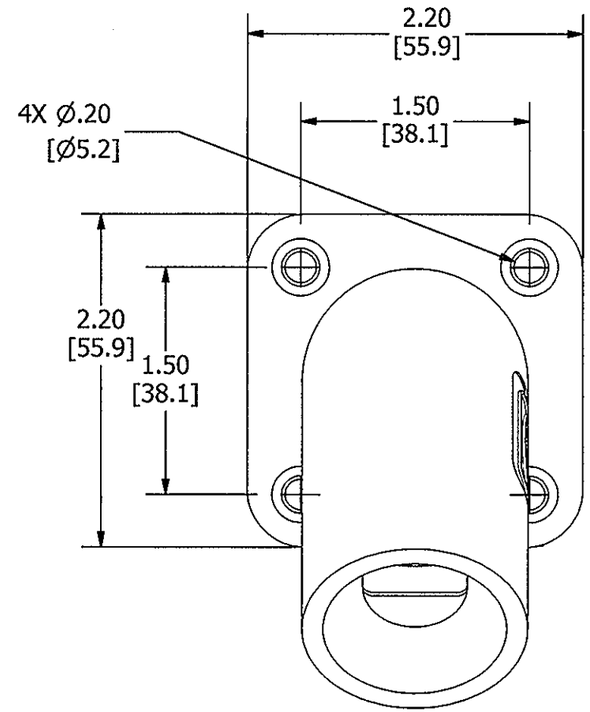


NOTES:

1. DIMENSIONS ARE IN INCHES ±.02 [mm] ±.5
2. RATING: 600VAC/250VDC, 400 AMP.
3. UL/c-ul ENCLOSURE TYPES 3R, 4X, 12, SEE INSTRUCTION SHEET.

| HUBBELL CAT. NO | COLOR |
|---|---|
| HBLMRASBK | BLACK |
| HBLMRASBL | BLUE |
| HBLMRASBN | BROWN |
| HBMRASGN | GREEN |
| HBLMRASO | ORANGE |
| HBLMRASR | RED |
| HBLMRASW | WHITE |
| HBLMRASY | YELLOW |

LIST OF PARTS

| DESCRIPTION | MATERIAL | FINISH |
|---|---|---|
| HOUSING | TPE | SEE TABLE |
| CONTACT | BRASS | |
| INTERNAL CAGE | NYLON | |

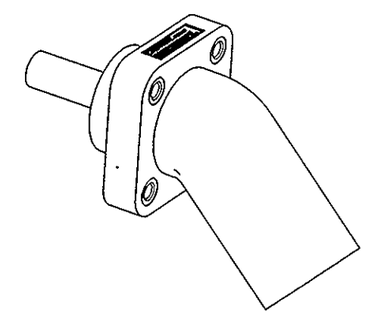

1/2 SCALE SHOWN

| SYM | DESCRIPTION | APPROVED | DATE |
|---|---|---|---|
| 1 | RELEASED PER DCN# 22075 CAC | TLS | 05/16/16 |

THE DESIGN AND DIMENSIONS OF THE PRODUCT SHOWN ON THIS DRAWING ARE SUBJECT TO CHANGE WITHOUT NOTICE

TITLE
SINGLE POLE
ANGLED MALE RECEPTACLE
W/STUD

TOLERANCES UNLESS OTHERWISE SPECIFIED
FRACTIONS ± 1/64
DECIMALS ± .030
ANGLES ± 2°

WIRING DEVICE-KELLEMS
HUBBELL INCORPORATED
SHELTON, CT

| | | | |
|---|---|---|---|
| DR. BY | CAC | APP. BY | TLS |
| TR. BY | | SCALE | 1:1 |
| CHK'D BY | TLS | DATE | 4/6/2016 |

DIMENSION SHEET FOR CAT. NO. SEE TABLE

REPAIRABLE ☐ NON-REPAIRABLE ☒

B

M-13365

1

CODE 74545