M-13367 | 1

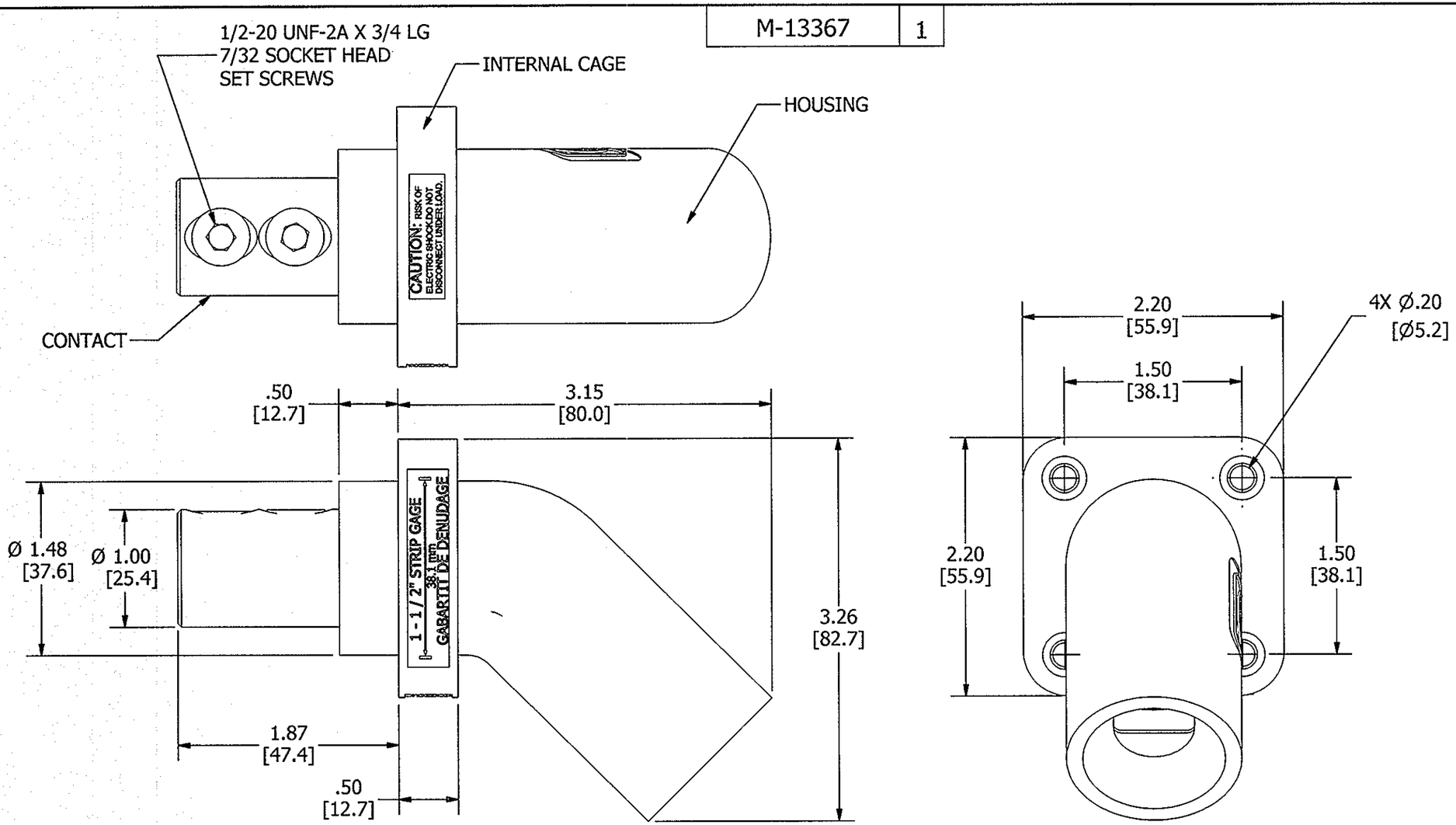

NOTES:

1. DIMENSIONS ARE IN INCHES ±.02 [mm] ±.5
2. RATING: 600VAC/250VDC, 400 AMP.
3. UL/c-ul ENCLOSURE TYPES 3R, 4X, 12, SEE INSTRUCTION SHEET.
4. CABLE SIZE #4 AWG - 4/0, COPPER ONLY.
5. STRAIN RELIEF WIRE & COPPER SHEET NOT SHOWN.

HUBBELL CAT. NO	COLOR
HBLMRABK	BLACK
HBLMRABL	BLUE
HBLMRABN	BROWN
HBLMRAGN	GREEN
HBLMRAO	ORANGE
HBLMRAR	RED
HBLMRAW	WHITE
HBLMRAY	YELLOW

LIST OF PARTS

DESCRIPTION	MATERIAL	FINISH
HOUSING	TPE	SEE TABLE
CONTACT	BRASS	
INTERNAL CAGE	NYLON	
SET SCREW	STEEL	NICKEL
STRAIN RELIEF WIRE	COPPER	
FOIL WRAP	COPPER	

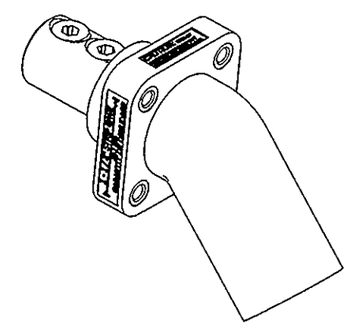

1/2 SCALE SHOWN

SYM	DESCRIPTION	APPROVED	DATE
1	RELEASED PER DCN# 22075 CAC	CAC TLS	04/28/16

THE DESIGN AND DIMENSIONS OF THE PRODUCT SHOWN ON THIS DRAWING ARE SUBJECT TO CHANGE WITHOUT NOTICE

TITLE
SINGLE POLE
ANGLED MALE RECEPTACLE
W/DOUBLE SET SCREW

TOLERANCES UNLESS OTHERWISE SPECIFIED
FRACTIONS ± 1/64
DECIMALS ± .030
ANGLES ± 2°

WIRING DEVICE-KELLEMS
HUBBELL INCORPORATED
SHELTON, CT

DR. BY	CAC	APP. BY	TLS
TR. BY		SCALE	1:1
CHK'D BY	TLS	DATE	4/6/2016

DIMENSION SHEET FOR CAT. NO. SEE TABLE

REPAIRABLE ☐ NON-REPAIRABLE ☒

B

M-13367

1

CODE 74545