M-13474 | 1

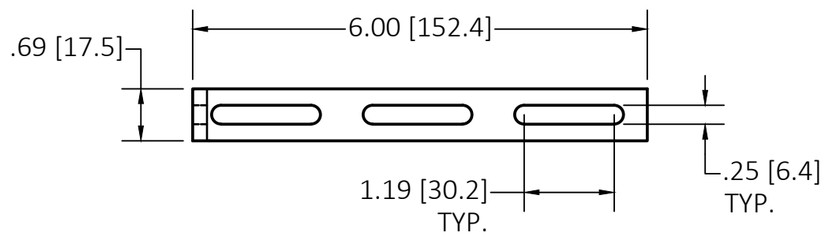

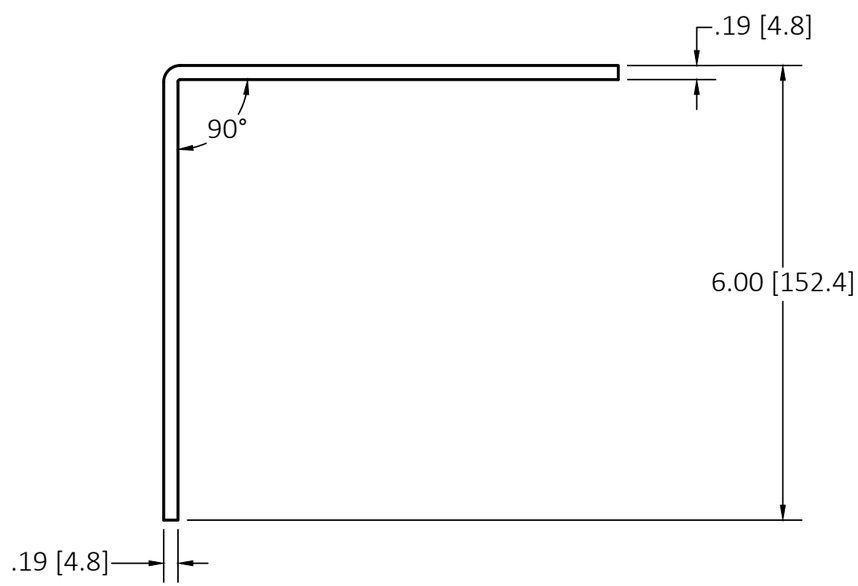

FINISH	CATALOG NUMBER
ZINC PLATED	HBTCS
BLACK	HBTCSBK
STAINLESS STEEL	HBTCSSS

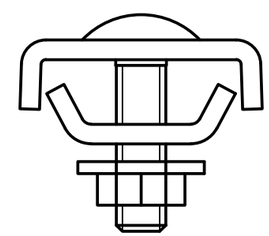

MOUNTING HARDWARE

SEE SPLICE KIT DRAWING (M-13506)
FOR ADDITIONAL INFORMATION

NOTES:

1. SOLD AS A SET
2. SET INCLUDES (2) 90° SPLICE BARS AND (8) SETS OF MOUNTING HARDWARE
3. USE ONE PER EACH TEE FITTING
4. USE TWO PER EACH CROSS FITTING

LIST OF PARTS

DESCRIPTION	MATERIAL	FINISH
CORNER SPLICE	GALV STEEL	SEE TABLE

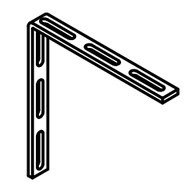

CATALOG NO. HBTCS
(NOT SHOWN TO SCALE)

REV	DESCRIPTION	APP	DATE
1	INITIAL DOCUMENT RELEASE PER DCN 22750	DDL	11/15/16

THE DESIGN AND DIMENSIONS OF THE PRODUCT SHOWN ON THIS DRAWING ARE SUBJECT TO CHANGE WITHOUT NOTICE. DIMENSIONS ARE IN INCHES [mm].

TITLE

CORNER SPLICE

WIRING DEVICE-KELLEMS
HUBBELL INCORPORATED
SHELTON, CT

TOLERANCES UNLESS OTHERWISE SPECIFIED
.XX = ± .01
.XXX= ± .005
ANGLE TOL. ±2°

DR. BY	BJ	SCALE	NONE
CHK. BY	MN	DATE	08/16/16

DIMENSION SHEET FOR CAT. NO.
SEE TABLE

B

M-13474

1

CAGE CODE 74545