M-13483 | 1

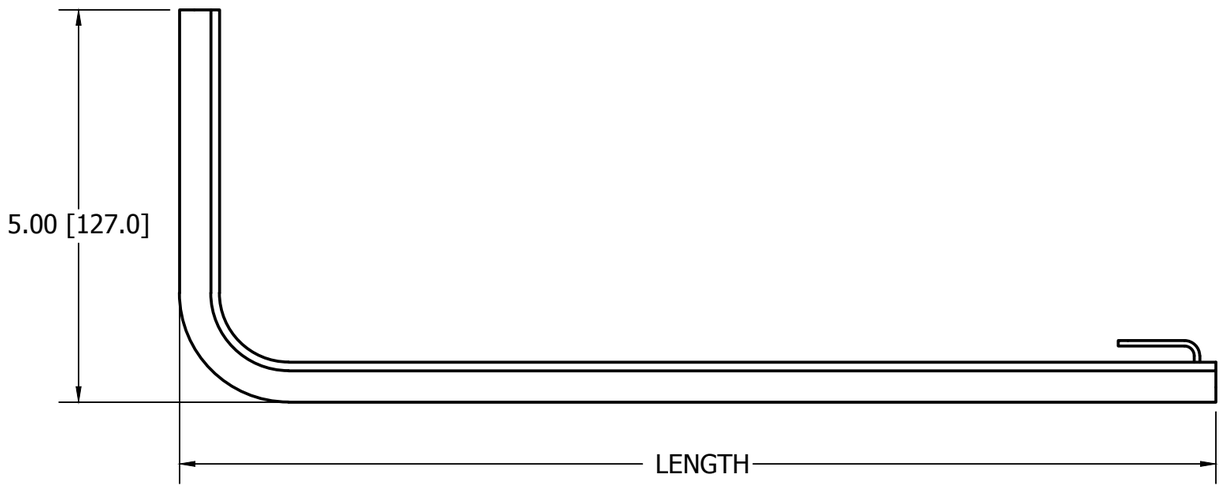


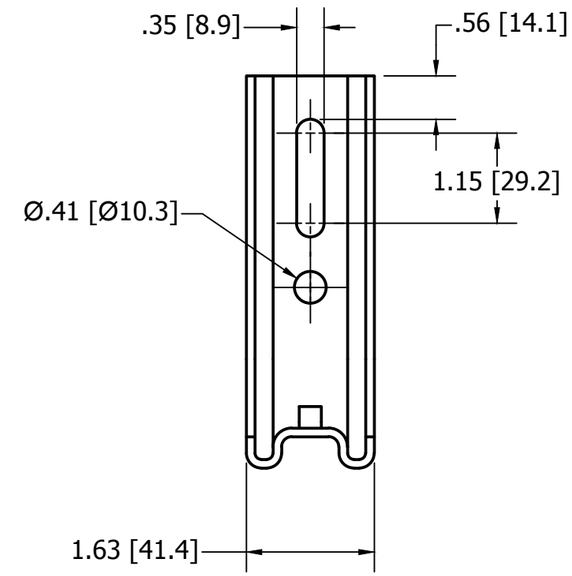


| TRAY WIDTH | LENGTH | PRE-GALVANIZED | BLACK POWDER COAT |
|---|---|---|---|
| 4 [101.6] | 5.52 [140.2] | HBTLB4 | HBTLB4BK |
| 6 [152.4] | 7.47 [189.7] | HBTLB6 | HBTLB6BK |
| 8 [203.2] | 9.42 [239.3] | HBTLB8 | HBTLB8BK |
| 12 [304.8] | 13.32 [338.3] | HBTLB12 | HBTLB12BK |
| 16 [406.4] | 17.22 [437.4] | HBTLB16 | HBTLB16BK |
| 18 [457.2] | 19.17 [486.9] | HBTLB18 | HBTLB18BK |
| 20 [508.0] | 21.12 [536.4] | HBTLB20 | HBTLB20BK |
| 24 [609.6] | 25.0 [635.0] | HBTLB24 | HBTLB24BK |

## NOTES:

1. INSTALL EVERY 6 FEET

LIST OF PARTS

| DESCRIPTION | MATERIAL | FINISH |
|---|---|---|
| L-BRACKET | STEEL | SEE TABLE |

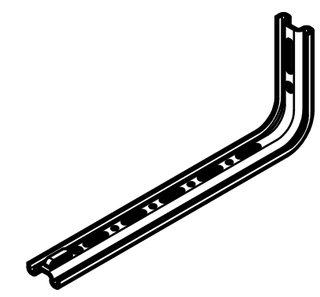

CATALOG NO. HBTLB12
(NOT SHOWN TO SCALE)

| REV | DESCRIPTION | APP | DATE |
|---|---|---|---|
| 1 | INITIAL DOCUMENT RELEASE PER DCN 22750 | DDL | 11/15/16 |

THE DESIGN AND DIMENSIONS OF THE PRODUCT SHOWN ON THIS DRAWING ARE SUBJECT TO CHANGE WITHOUT NOTICE. DIMENSIONS ARE IN INCHES [mm].

TITLE

L-BRACKET

WIRING DEVICE-KELLEMS
HUBBELL INCORPORATED
SHELTON, CT

TOLERANCES UNLESS OTHERWISE SPECIFIED
.XX = ± .01
.XXX= ± .005
ANGLE TOL. ±2°

| | | | |
|---|---|---|---|
| DR. BY | GM | SCALE | NONE |
| CHK. BY | MN | DATE | 09/08/16 |

DIMENSION SHEET FOR CAT. NO.
SEE TABLE

B

M-13483

1

CAGE CODE 74545