M-13478 | 1

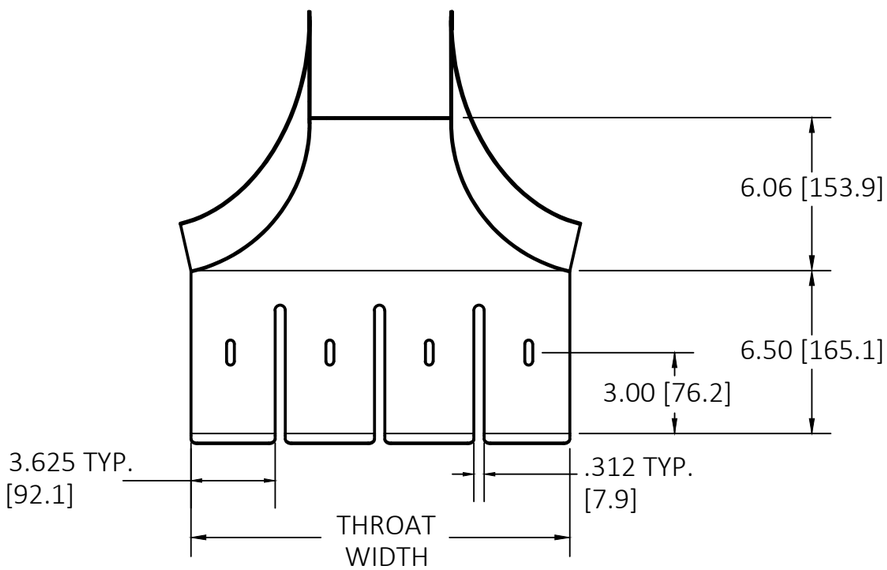

TRAY WIDTH	THROAT WIDTH	CATALOG NUMBER
4 [101.6]	15.44 [392.2]	HBTRD4BK
6 [152.4]		HBTRD6BK
12 [304.8]	23.31 [592.1]	HBTRD12BK

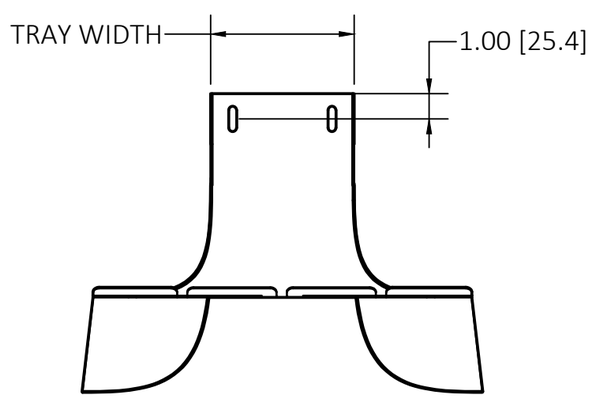

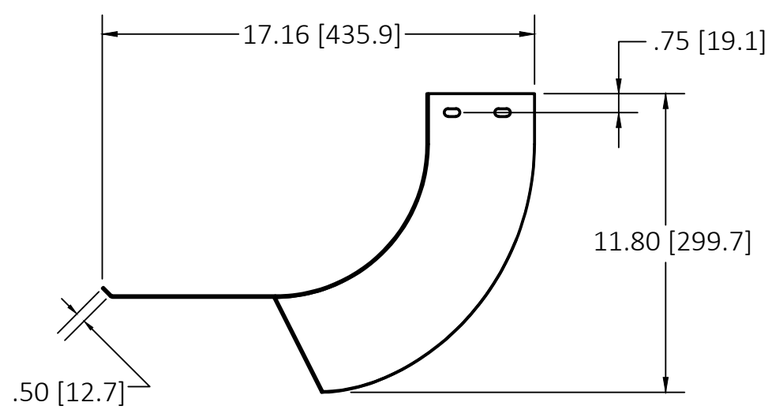

NOTES:

1. MOUNTING HARDWARE PURCHASED SEPARATELY
2. INCREASES CABLE PROTECTION AND CABLE BEND CONTROL

CAGE CODE 74545

LIST OF PARTS

DESCRIPTION	MATERIAL	FINISH
RADIUS DOWN	STEEL	BLACK

DIMENSION SHEET FOR CAT. NO.
SEE TABLE

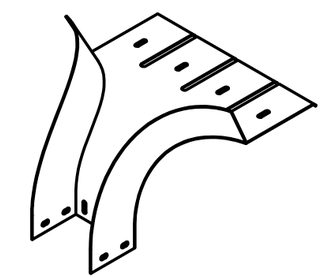

CATALOG NO. HBTRD4BK
(NOT SHOWN TO SCALE)

REV	DESCRIPTION	APP	DATE
1	INITIAL DOCUMENT RELEASE PER DCN 22750	DDL	11/15/16

THE DESIGN AND DIMENSIONS OF THE PRODUCT SHOWN ON THIS DRAWING ARE SUBJECT TO CHANGE WITHOUT NOTICE. DIMENSIONS ARE IN INCHES [mm].

TITLE
RADIUS DOWN

WIRING DEVICE-KELLEMS
HUBBELL INCORPORATED
SHELTON, CT

TOLERANCES UNLESS OTHERWISE SPECIFIED
.XX = ± .01
.XXX= ± .005
ANGLE TOL. ±2°

DR. BY BJ | SCALE NONE
CHK. BY MN | DATE 08/16/16

B
M-13478
1