M-13506 | 1

FINISH	CATALOG NUMBER
ZINC PLATED	HBTSK
BLACK	HBTSKBK
STAINLESS STEEL	HBTSKSS

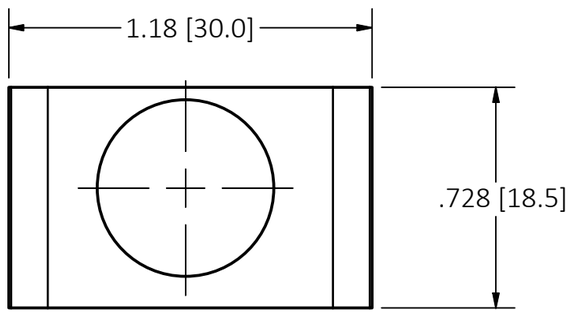

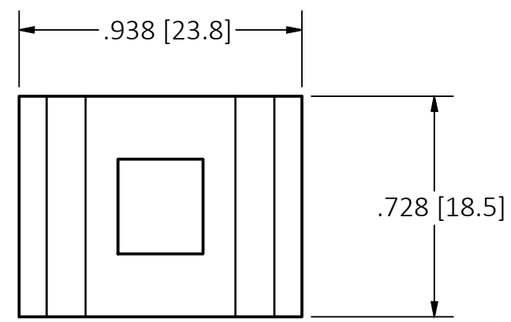

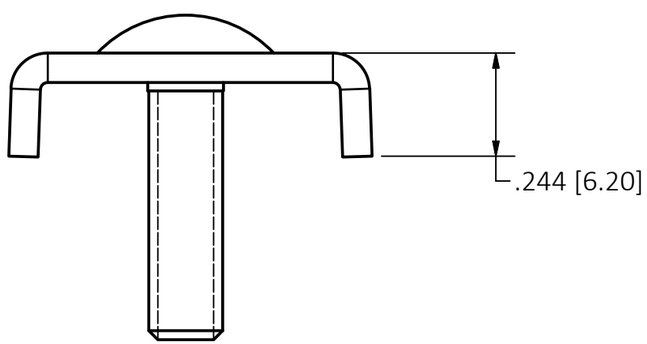

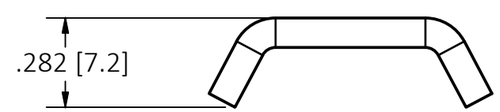

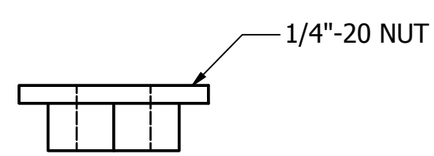

NOTES:

1. 3-PIECE STAKED BOLT, WASHER AND NUT COMBINATION
2. SPLICES STRAIGHT SECTIONS AND FIELD-FORMED FITTINGS

LIST OF PARTS

DESCRIPTION	MATERIAL	FINISH
SPLICE KIT	STEEL	SEE TABLE

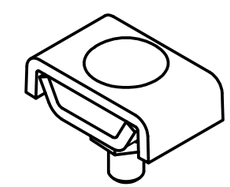

CATALOG NO. HBTSK
(NOT SHOWN TO SCALE)

REV	DESCRIPTION	APP	DATE
1	INITIAL DOCUMENT RELEASE PER DCN 22750	DDL	11/15/16

THE DESIGN AND DIMENSIONS OF THE PRODUCT SHOWN ON THIS DRAWING ARE SUBJECT TO CHANGE WITHOUT NOTICE. DIMENSIONS ARE IN INCHES [mm].

TITLE

SPLICE KIT

WIRING DEVICE-KELLEMS
HUBBELL INCORPORATED
SHELTON, CT

TOLERANCES UNLESS OTHERWISE SPECIFIED
.XX = ± .01
.XXX= ± .005
ANGLE TOL. ±2°

DR. BY	BJ	SCALE	NONE
CHK. BY	MN	DATE	08/16/16

DIMENSION SHEET FOR CAT. NO.
SEE TABLE

B

M-13506

1

CAGE CODE 74545