M-13499 | 1

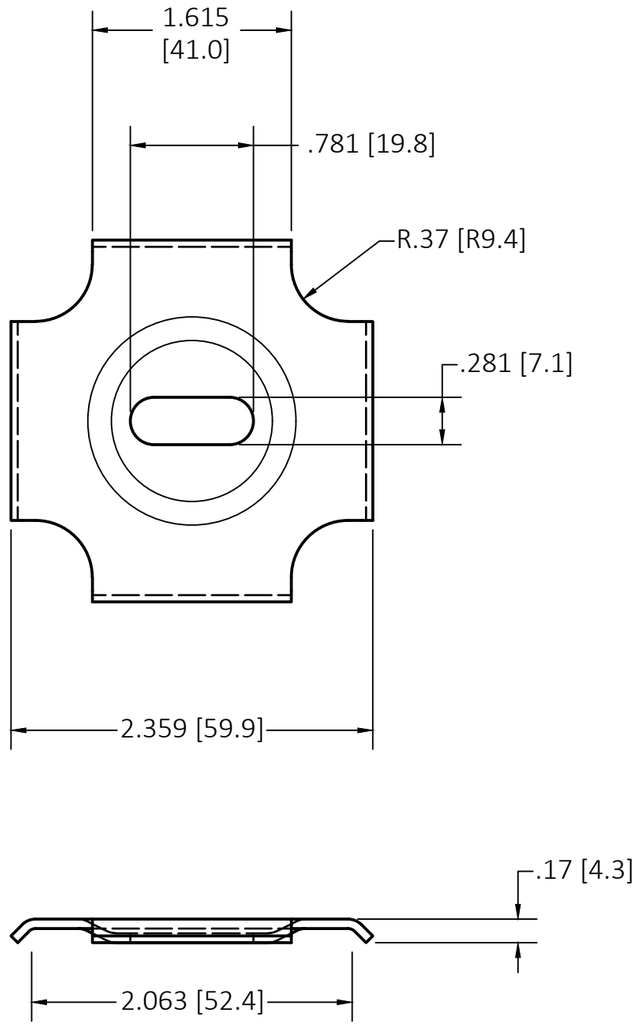

FINISH	CATALOG NUMBER
ZINC PLATED	HBTWS
BLACK	HBTWSBK
STAINLESS STEEL	HBTWSSS

NOTES:

1. THESE CAN BE USED AS A HOLD DOWN METHOD FOR TRAY TO STRUT
2. SPLICES STRAIGHT SECTIONS AND FITTINGS

CAGE CODE 74545

LIST OF PARTS

DESCRIPTION	MATERIAL	FINISH
WASHER SUPPORT	STEEL	SEE TABLE

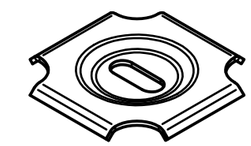

CATALOG NO. HBTWS
(NOT SHOWN TO SCALE)

REV	DESCRIPTION	APP	DATE
1	INITIAL DOCUMENT RELEASE PER DCN 22750	DDL	11/15/16

THE DESIGN AND DIMENSIONS OF THE PRODUCT SHOWN ON THIS DRAWING ARE SUBJECT TO CHANGE WITHOUT NOTICE. DIMENSIONS ARE IN INCHES [mm].

TITLE

WASHER SUPPORT

WIRING DEVICE-KELLEMS
HUBBELL INCORPORATED
SHELTON, CT

TOLERANCES UNLESS OTHERWISE SPECIFIED
.XX = ± .01
.XXX= ± .005
ANGLE TOL. ±2°

DR. BY	BJ	SCALE	NONE
CHK. BY	MN	DATE	08/16/16

DIMENSION SHEET FOR CAT. NO.
SEE TABLE

B

M-13499

1