M-8071 | 1

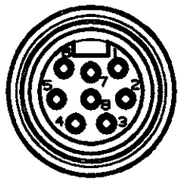

FIGURE 2

WIRE	COLOR
1	ORANGE
2	BLUE
3	WHITE/BLACK
4	BLACK
5	WHITE
6	RED
7	GREEN
8	RED/BLACK

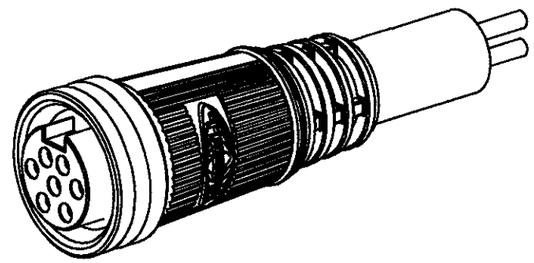

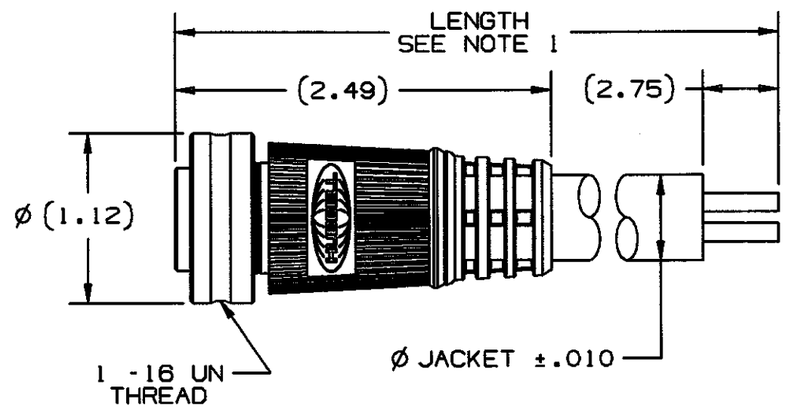

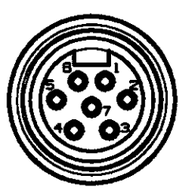

FIGURE 1

WIRE	COLOR
1	WHITE/BLACK
2	BLACK
3	WHITE
4	RED
5	ORANGE
6	BLUE
7	GREEN

NOTES:

1. PLUG ASSEMBLIES AVAILABLE IN 3, 6, 12, 15, 20, AND 25 FOOT LENGTHS. CONSULT FACTORY FOR OTHER ADDITIONAL LENGTHS.
2. TWO DIGIT SUFFIX IN CATALOG NUMBER DENOTES LENGTH OF PLUG ASSEMBLY IN FEET. HC_S07103 IS 3 FEET LONG.
3. CATALOG NUMBER PREFIX HCNS___ DENOTES A BLACK NYLON COUPLING NUT; HCMS___ DENOTES A NICKEL PLATED COUPLING NUT.

CATALOG NUMBER SEE NOTES 2 & 3	SEE FIGURE NUMBER	NUMBER OF POLES	AMPS	CABLE JACKET DIA.
HC_S071_	1	7	10	.571
HC_S081_	2	8	9	.571

LIST OF PARTS

DESCRIPTION	MATERIAL	FINISH
COUPLING NUT	SEE NOTE	3
INSULATOR	NYLON	WHITE
RETAINER	NYLON	
O-RING	RUBBER	BLACK
O-RING	SILICONE	GREEN
SOCKET CONTACT	COPPER ALLOY	GOLD OVER Pd/Ni
OVERMOLD	POLYURETHANE	BLACK
CABLE	16 AWG PVC	BLACK

DIMENSION SHEET FOR CAT. NO. SEE CHART

REPAIRABLE ☐ NON-REPAIRABLE ☒

SYM	REVISIONS	APP	DATE
1	RELEASED PER DCN6427-1. DJH		02/23/00

B

THE DESIGN AND DIMENSIONS OF THE PRODUCT SHOWN ON THIS DRAWING ARE SUBJECT TO CHANGE WITHOUT NOTICE

TITLE
STRAIGHT FEMALE PLUG, 600V SINGLE KEY, INTERNAL THREAD

TOLERANCES UNLESS OTHERWISE SPECIFIED
FRACTIONS ±1/64
DECIMALS ±.005
ANGLES ±2°

WIRING DEVICE-KELLEMS
HUBBELL INCORPORATED
BRIDGEPORT, CT

DR. BY DJH | APP. BY G.H.
TR. BY | SCALE NONE
CHK'D BY G.H. | DATE 02/23/00

M-8071

1

CODE 74545