M-9059 | 3

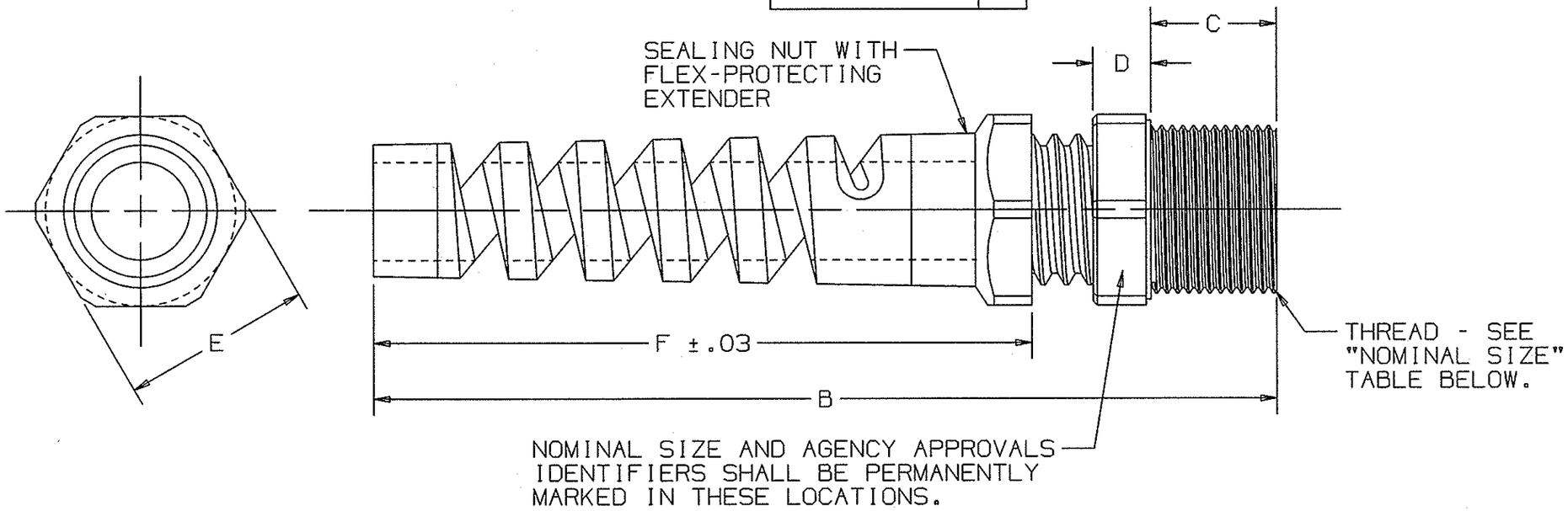

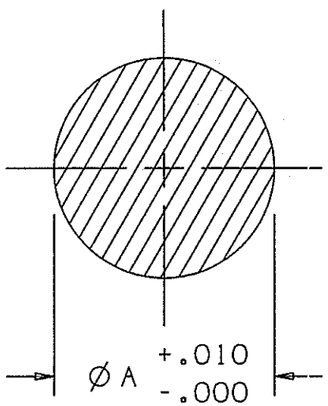

SUGGESTED CLEARANCE HOLE FOR NON-THREADED MOUNTING

1. MATERIAL: 6/6 NYLON WITH BUNA N GLAND.
2. TEMPERATURE RANGE: -22° F (-30° C) TO 212° F (100° C)
3. COLOR CODE: GRAY CAT. NO. LAST LETTER - GA
   BLACK CAT. NO. LAST LETTER - BA
4. CORD CONN. ARE HALOGEN AND SILICON FREE. PROTECTION CLASS: IP 68 PER DIN 40050 UP TO 70 PSI (5 BAR) WATER PRESSURE.
5. UL LISTED AND CSA CERTIFIED.
6. DIMENSIONS ARE IN INCHES AND METRIC.
7. TOLERANCE: .XX±.015 .XXX±.005 ANG.±2° GENERAL TOLERANCE DOES NOT APPLY.

CAT. NO.	NOMINAL SIZE	CABLE DIA. INCHES		CABLE DIA. METRIC		APPROVALS				PART DIMENSIONS											
										Ø A CLEARANCE HOLE		-B- MAXIMUM LENGTH		-C- THREAD LENGTH		-D- WRENCHING NUT THK		-E- WRENCHING FLATS		-F- SEALING NUT W/FLEX EXT	
		MIN	MAX	MIN	MAX	CSA	UL	UR		IN.	MM	IN.	MM	IN.	MM	IN.	MM	IN.	MM	IN.	MM
HJ1043GPK25	NPT 3/4	.250	.485	6.4	12.3	X	X			1.040	26.4	5.15	130.8	0.62	15.7	0.25	6.3	1.30	33.0	4.00	101.6
HJ1043BPK25	NPT 3/4	.250	.485	6.4	12.3	X	X			1.040	26.4	5.15	130.8	0.62	15.7	0.25	6.3	1.30	33.0	4.00	101.6
HJ1044GPK25	NPT 3/4	.485	.709	12.3	18.0	X	X			1.040	26.4	5.15	130.8	0.62	15.7	0.25	6.3	1.30	33.0	4.00	101.6
HJ1044BPK25	NPT 3/4	.485	.709	12.3	18.0	X	X			1.040	26.4	5.15	130.8	0.62	15.7	0.25	6.3	1.30	33.0	4.00	101.6

CODE 74545

LIST OF PARTS

DESCRIPTION	MATERIAL	FINISH
CORD CONNECTOR	SEE NOTES	

SYM	REVISIONS	APP	DATE
3	11/4/10 IN B COLUMN 5.15 [130.8] WAS 4.00 [101.6] DCN17289 SRE	SRE	11/4/10
2	ON HJ1044GPK25 & HJ1044BPK25: .485 WAS .450 & 12.3 WAS 11.4 PER DCN 12613 RCM	JPP	10/13/05
1	RELEASED PER DCN 10665	JVD	2/26/03

THE DESIGN AND DIMENSIONS OF THE PRODUCT SHOWN ON THIS DRAWING ARE SUBJECT TO CHANGE WITHOUT NOTICE

TITLE
NPT TYPE
FLEX CORD CONNECTOR

TOLERANCES UNLESS OTHERWISE SPECIFIED
FRACTIONS ±1/64
DECIMALS ±.005
ANGLES ±2°

WIRING DEVICE-KELLEMS
HUBBELL INCORPORATED
BRIDGEPORT, CT

DR. BY PAC | APP. BY
TR. BY | SCALE N/A
CHK'D BY | DATE 2/26/03

DIMENSION SHEET FOR CAT. NO. SEE TABLE

REPAIRABLE ☐ NON-REPAIRABLE ☐

B

M-9059

3