M–12401 2

NOTES: (UNLESS OTHERWISE SPECIFIED)
1. DIMENSIONS ARE IN INCHES (mm).
2. cULus LISTED.
3. CONFORMS TO UL STANDARD 508, UL STANDARD 244A, TO IP65.

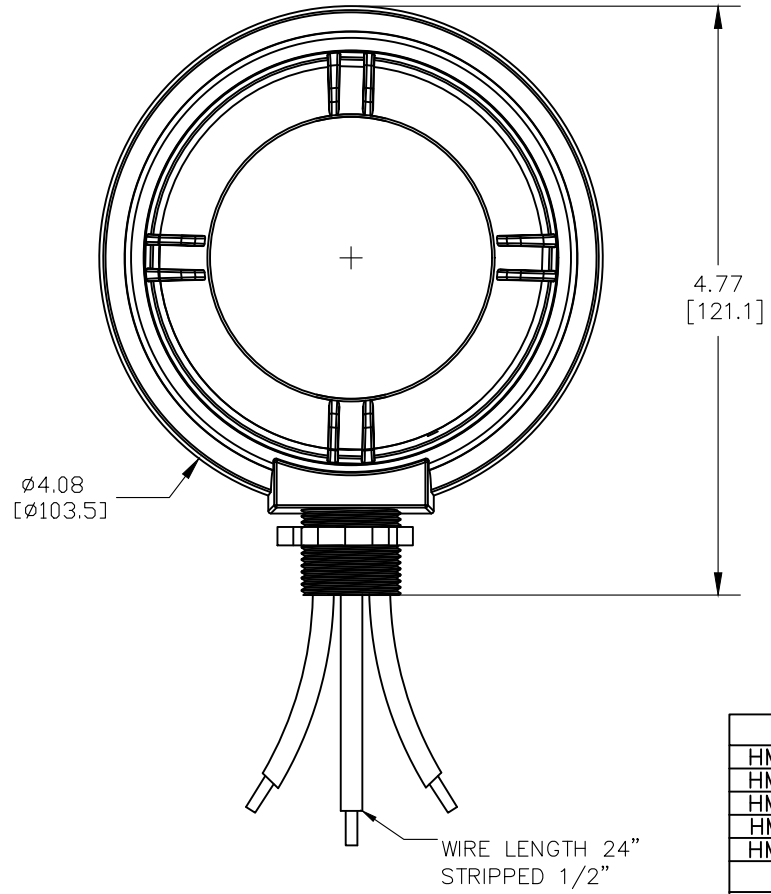

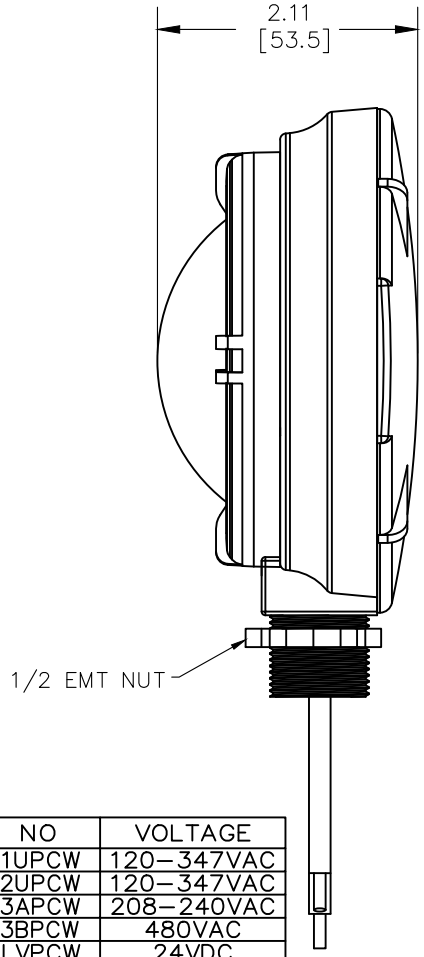

CAT. NO	VOLTAGE
HMHB21UPCW	120–347VAC
HMHB22UPCW	120–347VAC
HMHB23APCW	208–240VAC
HMHB23BPCW	480VAC
HMHB2LVPCW	24VDC
HBSXT13	120–347VAC
HBSXT28	208–240VAC
HBSXT48	480VAC
HBSXT24	24VDC
HBSXT13D	120–347VAC
HBSXT28D	208–240VAC
HBSXT48D	480VAC
HBSXT24D	24VDC

LOAD RATINGS (LINE VOLTAGE UNITS)

120VAC: 0–800W BALLAST OR TUNGSTEN
277VAC: 0–1200W BALLAST
347VAC: 0–1500W BALLAST
208/340VAC: 0–1200W BALLAST
480VAC: 0–2400W BALLAST

CODE 74545

LIST OF PARTS

DESCRIPTION	MATERIAL	FINISH
BASE	PLASTIC	WHITE
NUT	STEEL	Zn–PLATE

SYM	REVISIONS	APP	DATE
2	ADDED HBSXTXXX CATS AND SPECS TO TABLE UPDATED DIMS, REMOVED .52[13.3] DIM PER DCN 23353. MYA	DDL	10/17/17
1	RELEASED CUSTOMER DRAWING PER DCN# 19677 MJZ, PJB	PJB	3/8/13

THE DESIGN AND DIMENSIONS OF THE PRODUCT SHOWN ON THIS DRAWING ARE SUBJECT TO CHANGE WITHOUT NOTICE

TITLE
HIGH BAY OCCUPANCY SENSOR IP65 WATER TIGHT

TOLERANCES UNLESS OTHERWISE SPECIFIED
.XX = ±.01
.XXX = ±.005
ANGLES = ±2°

WIRING DEVICE–KELLEMS
HUBBELL INCORPORATED
SHELTON, CT

DR. BY MJZ	APP. BY PJB
TR. BY MJZ	SCALE NONE
CHK. BY MJZ	DATE 3/8/13

DIMENSION SHEET FOR CAT. NO. SEE TABLE

REPAIRABLE ☐ NON–REPAIRABLE ☒

B

M–12401

2