M-8203 3

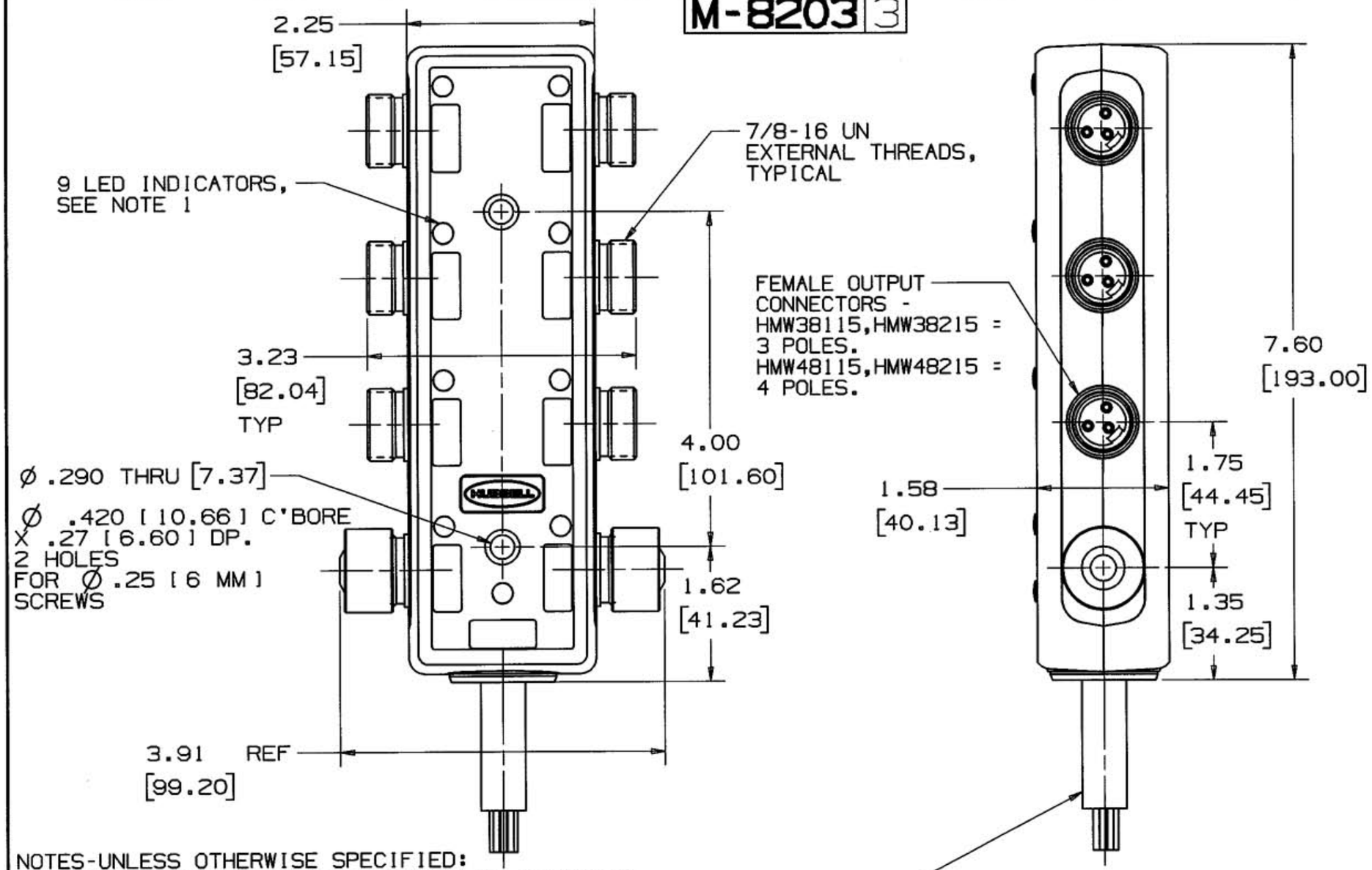

NOTES-UNLESS OTHERWISE SPECIFIED:
1. MODEL SHOWN - HMW38115. HMW48115, HMW38215, HMW48215 ARE IDENTICAL EXCEPT: NUMBER OF PINS ON OUTPUT CONNECTORS AND SIZE/CONFIGURATION OF INPUT CORD; HMW38215 & HMW48215 HAVE NO LEDS.
2. HOUSING COLOR - BLACK.
3. KNURLED, THREADED CAPS PROVIDED AS SHOWN, ALL OTHER PORTS SUPPLIED WITH SHIPPING CAPS ONLY.
4. DIMENSIONS ARE INCHES & [MILLIMETERS].

CATALOG NUMBER	RATING	LED'S	CIRCUITRY
HMW38115	8 AMPS, 120 VAC/DC MAX	YES	PNP
HMW48115	8 AMPS, 120 VAC/DC MAX	YES	PNP
HMW38215	8 AMPS, 600 VAC/DC MAX	NO	PNP
HMW48215	8 AMPS, 600 VAC/DC MAX	NO	PNP

CODE 74545

LIST OF PARTS

DESCRIPTION	MATERIAL	FINISH
HOUSING	RIGID PVC	---
PORT CONNECTIONS	BRASS	NICKEL PLATED
INPUT CORD	PVC JACKET	---
OUTPUT INSULATORS	NYLON	---

DIMENSION SHEET FOR CAT. NO. SEE TABLE

REPAIRABLE ☐ NON-REPAIRABLE ☒

SYM	REVISIONS	APP	DATE
3	RATINGS FOR HMW382115 & HMW48215 WERE 120VAC/DC PER DCN10068	SRE	7/30/02
2	ADDED HMW382115 & HMW48215 PER DCN9201	SRE SRE	3/27/02
1	RELEASED PER DCN 8914	SRE SRE	8/28/01

THE DESIGN AND DIMENSIONS OF THE PRODUCT SHOWN ON THIS DRAWING ARE SUBJECT TO CHANGE WITHOUT NOTICE

TITLE SIGNALPLEX™ PORT HMW38115, HMW48115, HMW38215, HMW48215

TOLERANCES UNLESS OTHERWISE SPECIFIED
FRACTIONS ±1/64
DECIMALS ±.005
ANGLES ±2°

WIRING DEVICE-KELLEMS
HUBBELL INCORPORATED
BRIDGEPORT, CT

DR. BY SRE	APP. BY
TR. BY	SCALE NONE
CHK'D BY	DATE 8/8/01

B

M-8203

3