M-13376 | 1

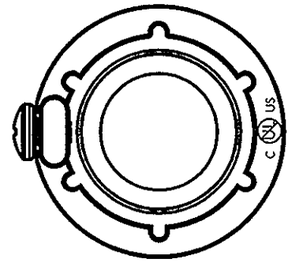

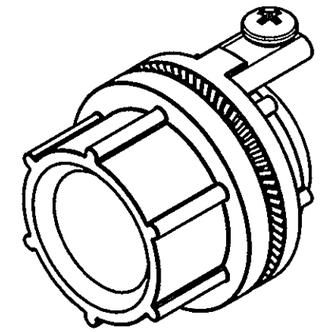

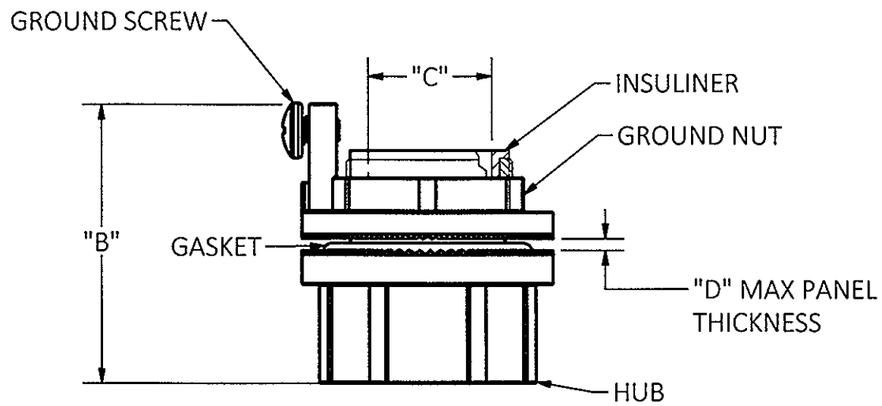

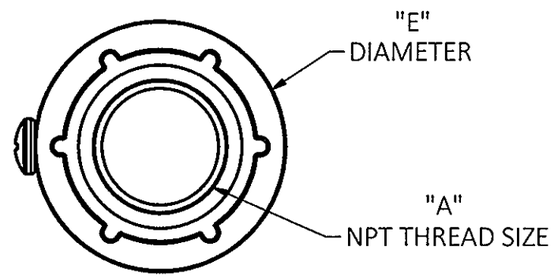

NOTES:
1-COMPONENT IS C(UL)US LISTED.
2-SUITABLE FOR NEMA TYPE ENCLOSURES
2, 3, 3R, 4, 4X, 12 and 13.

CATALOG NUMBER	THREAD SIZE "A"	DIMENSION "B"	DIMENSION "C"	"D" MAX.	DIMENSION "E"
HUBS75SS	3/4" NPT	2.060IN. [52.32mm]	.790IN. [(20mm]	.190IN. [4.83mm]	Ø 1.700IN. [43.18mm]
HUBS125SS	1 1/4" NPT	2.280IN. [57.9mm]	1.280IN. [32.5mm]	.250IN. [6.35mm]	Ø 2.375IN. [60.32mm]

CAGE CODE 74545

LIST OF PARTS

DESCRIPTION	MATERIAL	FINISH
HUB	STAINLESS STEEL	
GROUND NUT	STAINLESS STEEL	
INSULINER	PLASTIC, LEXAN	RED
GASKET	RUBBER, VITON	BLACK

DIMENSION SHEET FOR CAT. NO.

SEE TABLE

REV	DESCRIPTION	APP	DATE
1	RELEASED PER DCN 21979.	PJB	3/23/16

THE DESIGN AND DIMENSIONS OF THE PRODUCT SHOWN ON THIS DRAWING ARE SUBJECT TO CHANGE WITHOUT NOTICE. DIMENSIONS ARE IN INCHES [mm].

TITLE WATERTIGHT GROUNDED SST CONDUIT HUB

WIRING DEVICE-KELLEMS
HUBBELL INCORPORATED
SHELTON, CT

TOLERANCES UNLESS OTHERWISE SPECIFIED
.XX = ± .01
.XXX= ± .005
ANGLE TOL. ±2°

DR. BY MJZ | SCALE 1 : 1
CHK. BY PJB | DATE 3/18/16

B | M-13376 | 1