M-9385 | 4

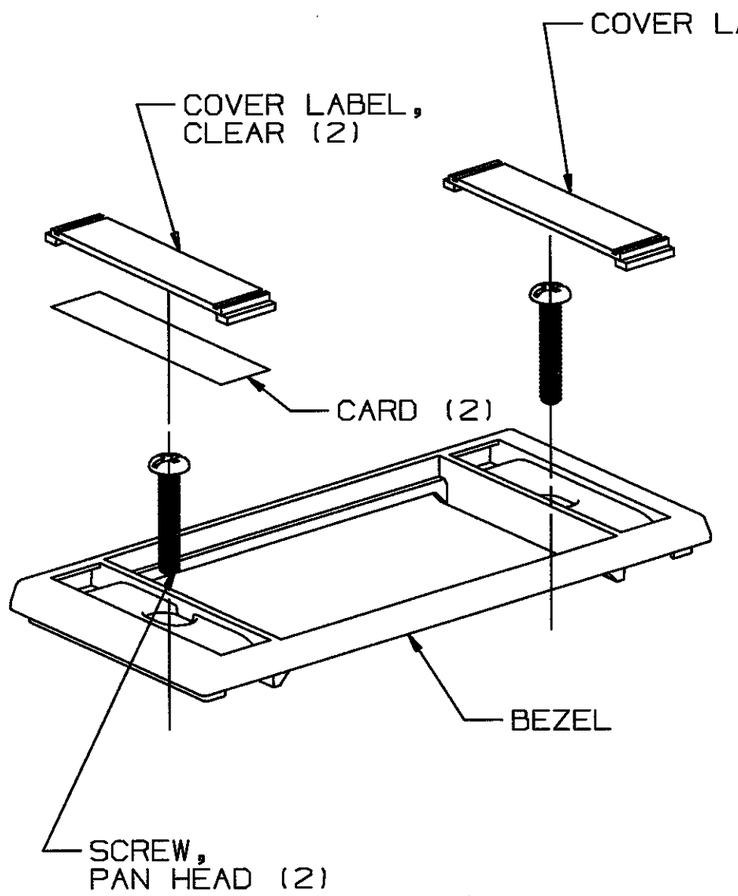

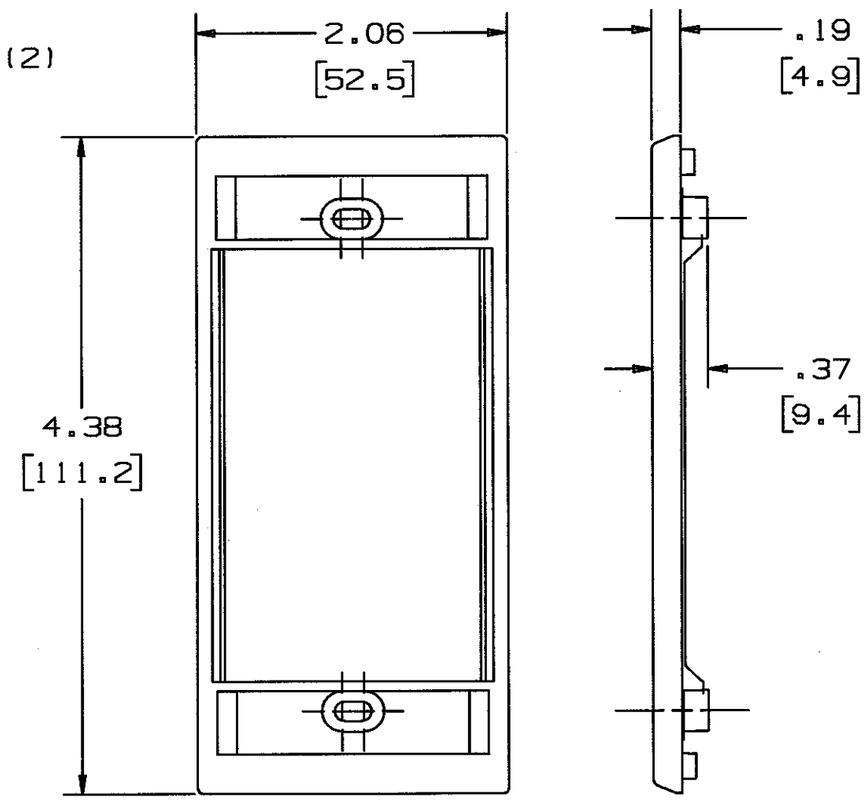

NOTES:
1) FOR USE WITH HUBBELL SURFACE RACEWAY BOXES AND INFINE MODULES.

ALL DIMENSIONS = INCHES [MM]

CATALOG NUMBER	COLOR
KPIMBZOW	OFFICE WHITE
KPIMBZAL	ALMOND
KPIMBZGY	GRAY

LIST OF PARTS

DESCRIPTION	MATERIAL	FINISH
BEZEL	PC/ABS	SEE CHART
COVER LABEL, OFF. WHITE		SEE CHART
COVER LABEL, CLEAR		CLEAR
CARD	PAPER	WHITE
SCREW	STEEL	ZINC PLATED

DIMENSION SHEET FOR CAT. NO. SEE CHART

SYM	REVISIONS	APP	DATE
4	ADDED KPIMBZGY PER DCN 12720 SPN	SRE	11/28/05
3	TABLE FOR LIST OF PARTS COLUMN FINISH, "SEE CHART" WAS "OFFICE WHITE". "DIMENSION SHEET FOR CAT. NO.", SEE CHART WAS KPIMBZOW. TITLE REMOVED KPIMBZOW AND OFFICE WHITE. ADDED TABLE WITH NEW CAT. NUMBER KPIMBZAL. PER DCN 12507 SPN	SRE	8/23/05
2	"KPIMBZOW" WAS "HBLIMBZOW" PER DCN 11782 RCM	SRE	6/7/04
1	RELEASED PER DCN 11708	SRE	4/29/04

REPAIRABLE ☐
NON-REPAIRABLE ☒

B

THE DESIGN AND DIMENSIONS OF THE PRODUCT SHOWN ON THIS DRAWING ARE SUBJECT TO CHANGE WITHOUT NOTICE

TITLE
BEZEL
INFINe

TOLERANCES UNLESS OTHERWISE SPECIFIED
FRACTIONS ±1/64
DECIMALS ±.005
ANGLES ±2°

WIRING DEVICE-KELLEMS
HUBBELL INCORPORATED
BRIDGEPORT, CT

DR. BY SRE	APP. BY SRE
TR. BY	SCALE 1:1
CHK'D BY SRE	DATE 4/11/04

M-9385

4

CODE 74545