M-9631 | 4

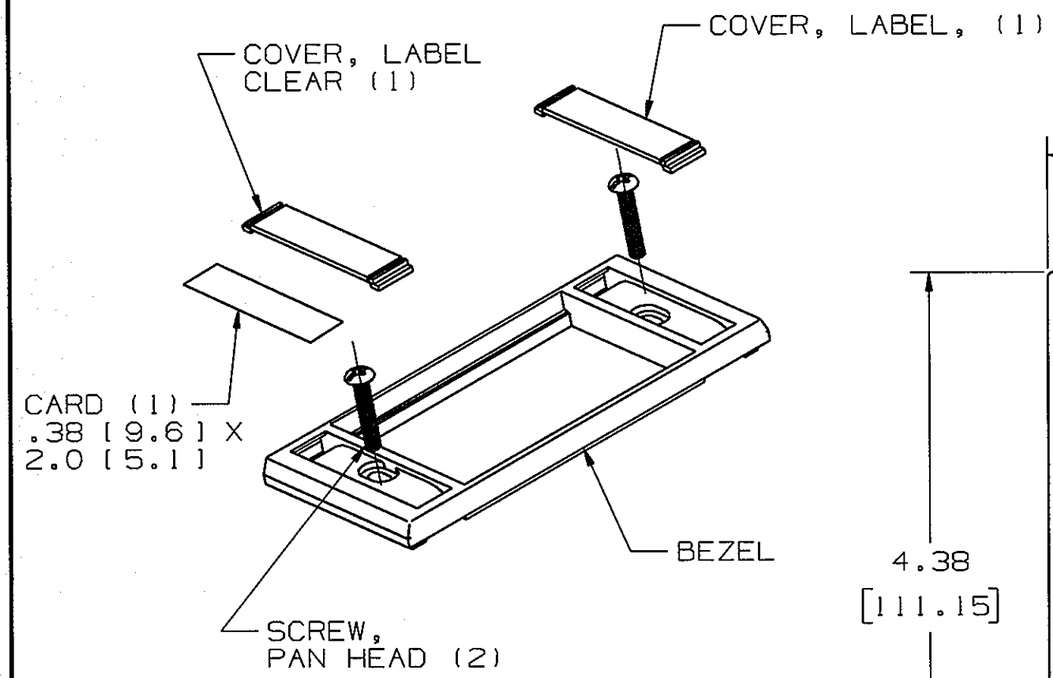

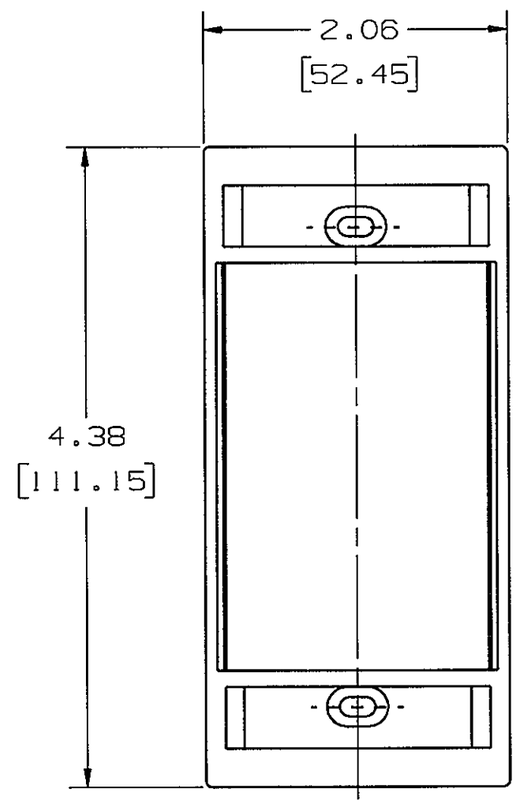

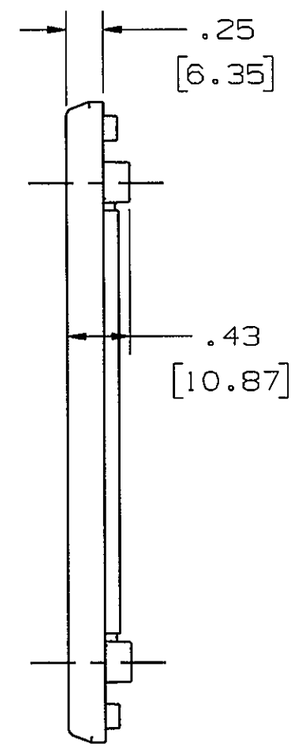

CATALOG NUMBER	COLOR
KPORTOW	OFFICE WHITE
KPORTGY	GRAY
KPORTAL	ALMOND
KPORTBK	BLACK
KPORTW	WHITE

NOTES:
1. FOR USE WITH ORTRONICS SERIES II MODULES.

ALL DIMENSIONS IN INCHES AND [MM]

LIST OF PARTS

DESCRIPTION	MATERIAL	FINISH
BEZEL	PC/ABS	SEE TABLE
COVER, LABEL		SEE TABLE
COVER, LABEL CLEAR		CLEAR
CARD	PAPER	WHITE
SCREW	STEEL	ZINC PLATED

SYM	REVISIONS	APP	DATE
4	ADDED KPORTBK AND AND KPORTW TO TABLE PER DCN22827. MJZ,EM.	EM mz	3/13/17
3	UPDATED FORMAT TO CURRENT SHELTON ADDRESS PER DCN 21039. MYA	DJP	3/3/15
2	ADDED DIMS OF CARD DCN12839	SRE	1/23/06
1	RELEASED PER DCN 12507	SRE	8/4/05

THE DESIGN AND DIMENSIONS OF THE PRODUCT SHOWN ON THIS DRAWING ARE SUBJECT TO CHANGE WITHOUT NOTICE

TITLE
BEZEL
ORTRONICS MODULES

TOLERANCES UNLESS OTHERWISE SPECIFIED
.XX = ±.01
.XXX = ±.005
ANGLES = ±2°

WIRING DEVICE-KELLEMS
HUBBELL INCORPORATED
SHELTON, CT

DR. BY AMM | APP. BY SRE
TR. BY | SCALE 1:1
CHK:DB BY SRE | DATE 6/27/05

DIMENSION SHEET FOR CAT. NO. SEE TABLE

REPAIRABLE ☐ NON-REPAIRABLE ☒

B

M-9631

4

CODE 74545