M-10126 2

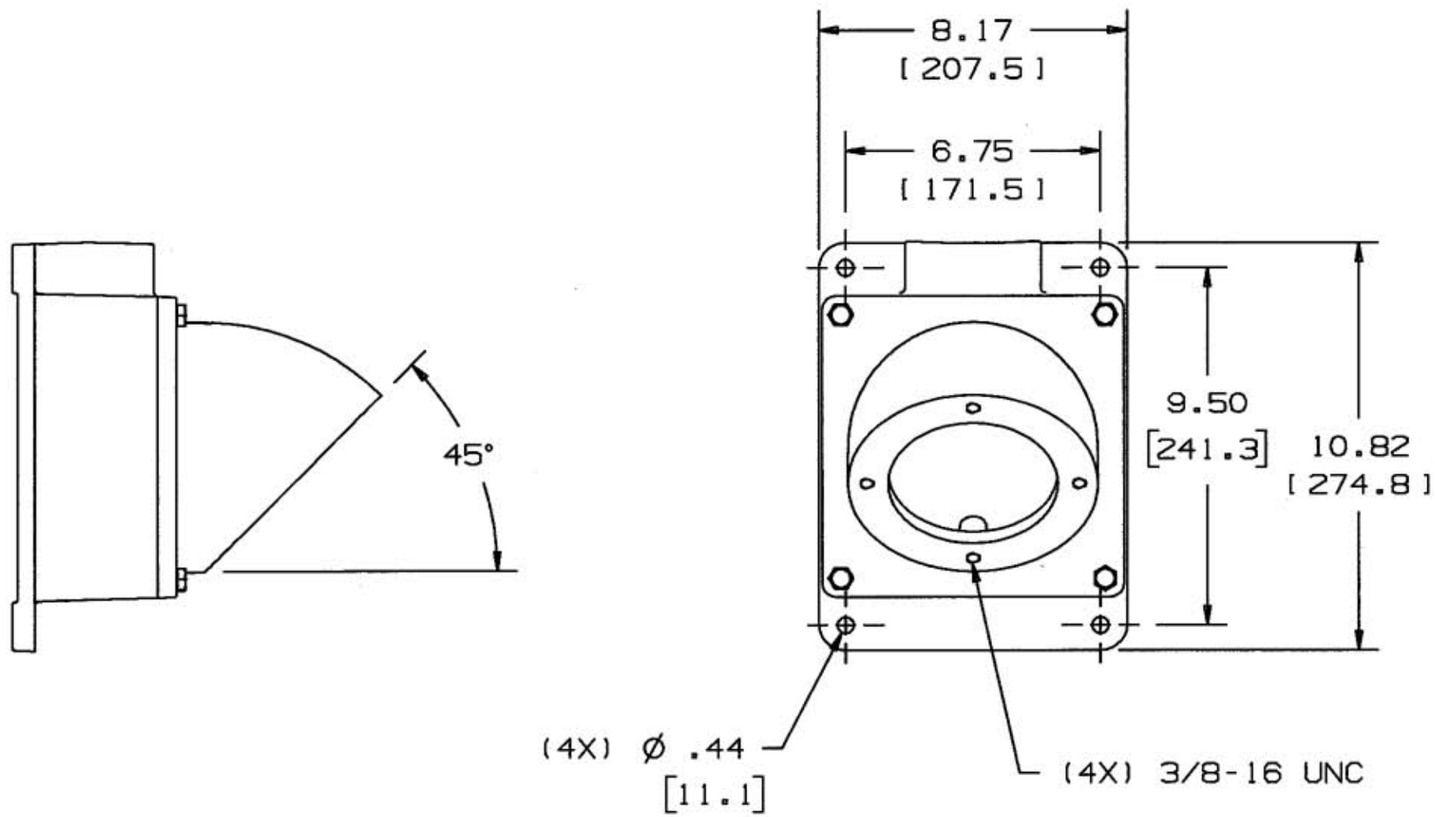

NOTE:
1. DIMENSIONS ARE IN INCHES [MM].
2. .XX TOLERANCE TO BE ±.03

CATALOG NUMBER	HUB SIZE
MB2003W	2 NPT
MB2004W	$2\frac{1}{2}$ NPT

LIST OF PARTS

DESCRIPTION	MATERIAL	FINISH

SYM	REVISIONS	APP	DATE
2	CATALOG MB2003W HUB SIZE 2 WAS 1 1/4. MB2004W HUB 2 1/2 WAS 1 1/2.PER DCN 13678 SPN	DJP	1/25/07
1	RELEASED PER DCN 13080. ABS	DJP	5/17/06

THE DESIGN AND DIMENSIONS OF THE PRODUCT SHOWN ON THIS DRAWING ARE SUBJECT TO CHANGE WITHOUT NOTICE

TITLE
200 AMP FOUR-WAY BACK BOX

TOLERANCES UNLESS OTHERWISE SPECIFIED
FRACTIONS ± 1/64
~~DECIMALS ± .005~~
ANGLES ± 2°

WIRING DEVICE-KELLEMS
HUBBELL INCORPORATED
BRIDGEPORT, CT

DR. BY ABS	APP. BY DJP
TR. BY	SCALE 1:4
CHK'D BY DJP	DATE 5/17/06

DIMENSION SHEET FOR CAT. NO. SEE TABLE

REPAIRABLE ☐ NON-REPAIRABLE ☒

B

M-10126

2

CODE 74545