M-11798 2

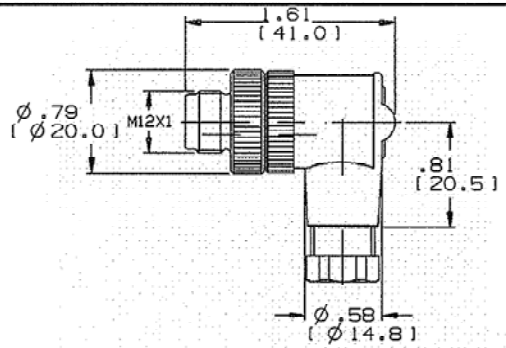

DIMENSIONS ARE INCHES[mm]

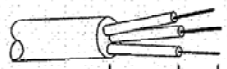

WIRE STRIP LENGTH

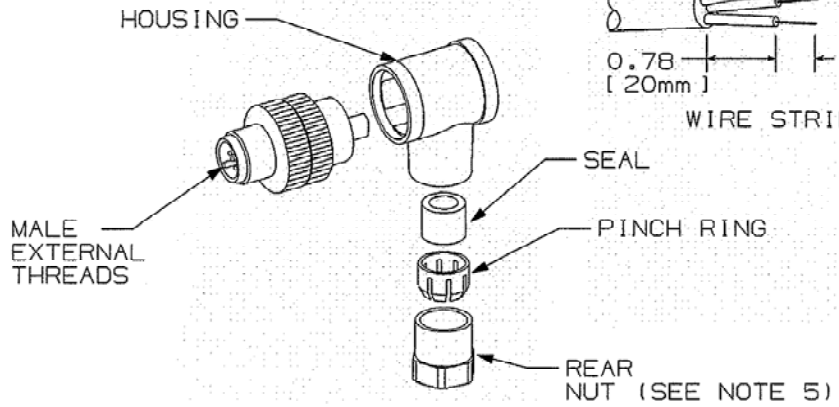

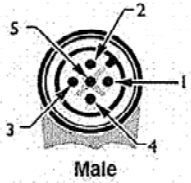

FACE VIEW

NOTES: UNLESS OTHERWISE SPECIFIED:

1. WIRE SIZE: 18AWG (0.75mm²) MAX.
2. ENCLOSURE RATING: IP67
3. OPERATING TEMPERATURE: -40° C TO 88° C.
4. c UL us RECOGNIZED.
5. RECOMMENDED REAR NUT TORQUES
   F7 STYLE - 7-8 IN.LBS (80-100 Ncm)
   F9 STYLE - 7-8 IN.LBS (80-100 Ncm).
6. RECOMMENDED TERMINAL TORQUE
   3.54 IN.LBS (40Ncm)

CATALOG NO.	POLES	RATING	CABLE RANGE
MIMA14F7	4	250V/4A	0.16-0.24 IN.
MIMA14F9	4	250V/4A	0.24-0.32 IN.
MIMA15F7	5	125V/4A	0.16-0.24 IN.
MIMA15F9	5	125V/4A	0.24-0.32 IN.

LIST OF PARTS

DESCRIPTION	MATERIAL	FINISH
COUPLING NUT	BRASS	NICKEL PLATED
CONNECTOR SHELL	NYLON	BLACK
CONTACTS	BRASS	GOLD PLATED
		PALLADIUM
		NICKEL

SYM	REVISIONS	APP	DATE
2	12/21/10 CHANGE RATING FROM 250V TO 125V MICRO 5P REVERSED INCHES [mm] PER DCN 17339 CAC	CAC	
1	12/1/10 NEW RELEASE PER DCN 17341 CAC		

THE DESIGN AND DIMENSIONS OF THE PRODUCT SHOWN ON THIS DRAWING ARE SUBJECT TO CHANGE WITHOUT NOTICE

TITLE ANGLED MALE IN-LINE MICRO QUICK THD. TYPE F7, F9

TOLERANCES UNLESS OTHERWISE SPECIFIED
FRACTIONS ±1/64
DECIMALS ±.005
ANGLES ±2°

WIRING DEVICE-KELLEMS
HUBBELL INCORPORATED
BRIDGEPORT, CT

DR. BY CAC | APP. BY
TR. BY | SCALE NONE
CHK'D BY | DATE 12-2-10

DIMENSION SHEET FOR CAT. NO. SEE TABLE

REPAIRABLE ☒ NON-REPAIRABLE ☐

B

M-11798

2

CODE 74545