M-11796 2

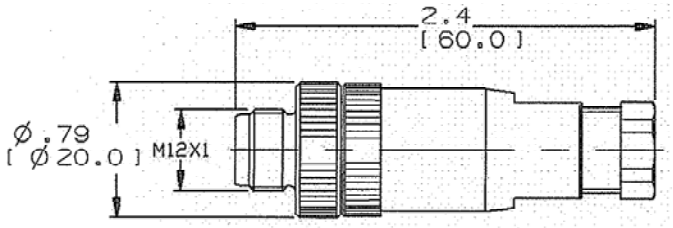

DIMENSIONS ARE INCHES[mm]

0.78 [20mm] — 0.20 [5mm]

WIRE STRIP LENGTH

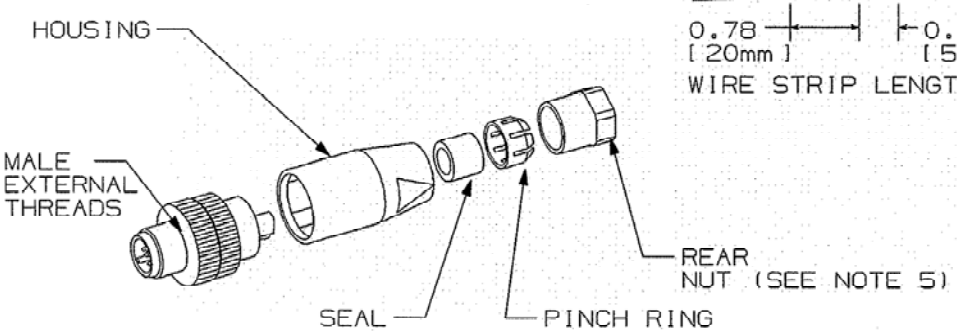

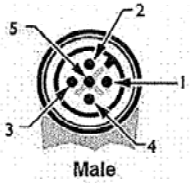

FACE VIEW

NOTES: UNLESS OTHERWISE SPECIFIED:

1. WIRE SIZE: 18AWG (0.75mm²) MAX.
2. ENCLOSURE RATING: IP67
3. OPERATING TEMPERATURE: -40° C TO 88° C.
4. c.UL us RECOGNIZED.
5. RECOMMENDED REAR NUT TORQUES
   F7 STYLE - 7-8 IN.LBS (80-100 Ncm)
   F9 STYLE - 7-8 IN.LBS (80-100 Ncm).
6. RECOMMENDED TERMINAL TORQUE
   3.54 IN.LBS (40Ncm)

CAT. NO.	POLES	RATING	CABLE RANGE
MIMS14F7	4	250V/4A	0.16-0.24 IN.
MIMS14F9	4	250V/4A	0.24-0.32 IN.
MIMS15F7	5	125V/4A	0.16-0.24 IN.
MIMS15F9	5	125V/4A	0.24-0.32 IN.

LIST OF PARTS

DESCRIPTION	MATERIAL	FINISH
COUPLING NUT	BRASS	NICKEL PLATED
CONNECTOR SHELL	NYLON	BLACK
CONTACTS	BRASS	GOLD PLATED
		PALLADIUM
		NICKEL

SYM	REVISIONS	APP	DATE
2	12/21/10 CHANGE RATING FROM 250V TO 125V MICRO 5P REVERSED INCHES[mm] PER DCN 17339 CAC	CAC	
1	12/1/10 NEW RELEASE PER DCN 17341 CAC		

THE DESIGN AND DIMENSIONS OF THE PRODUCT SHOWN ON THIS DRAWING ARE SUBJECT TO CHANGE WITHOUT NOTICE

TITLE STRAIGHT MALE MICRO QUICK THD. TYPE F7, F9

TOLERANCES UNLESS OTHERWISE SPECIFIED
FRACTIONS ±1/64
DECIMALS ±.005
ANGLES ±2°

WIRING DEVICE-KELLEMS
HUBBELL INCORPORATED
BRIDGEPORT, CT

DR. BY CAC | APP. BY
TR. BY | SCALE NONE
CHK'D BY | DATE 12-2-10

DIMENSION SHEET FOR CAT. NO. SEE TABLE

REPAIRABLE ☒ NON-REPAIRABLE ☐

B M-11796 2

CODE 74545