M-13461 | 1

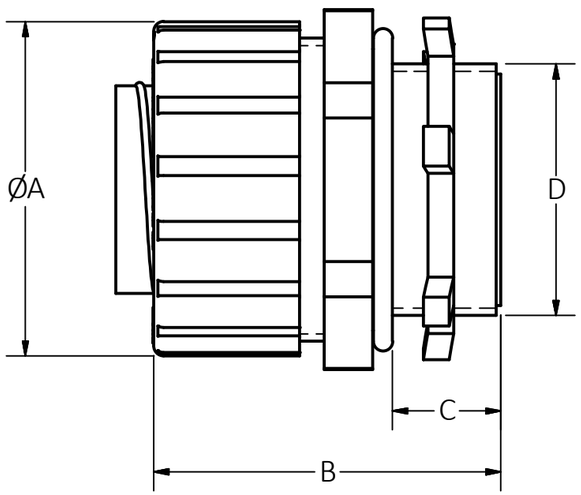

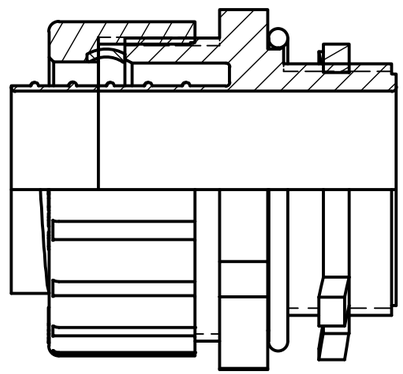

SECTION A-A
SCALE 1 : 1

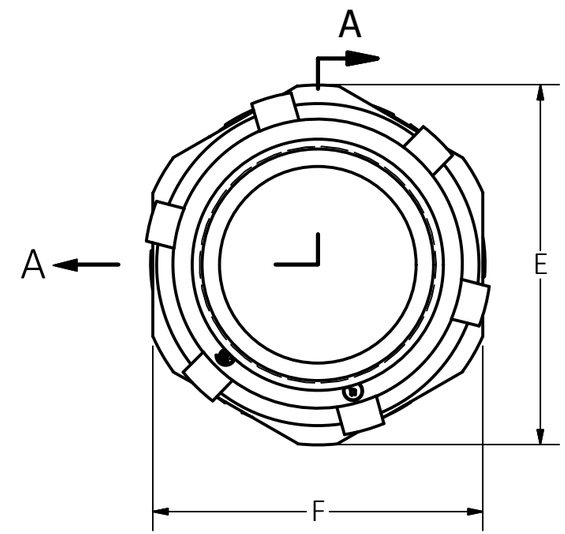

CAT NO. BLACK	CAT NO. GRAY	NPT THREAD SIZE (MD)*	CONDUIT TRADE SIZE (MD)*	- A - INCH (mm)	- B - INCH (mm)	- C - INCH (mm)	- D - INCH (mm)	- E - INCH (mm) A/C*	- F - INCH (mm) A/F*	- G - INCH (mm)
P125NBK	P125NGY	1 1/4 (35)	1 1/4 (35)	2.20 (55.9)	2.15 (54.6)	0.74 (18.8)	1.30 (33.0)	2.38 (60.5)	2.18 (55.4)	1.745 (44.32)
P150NBK	P150NGY	1 1/2 (41)	1 1/2 (41)	2.49 (63.2)	2.35 (59.7)	0.76 (19.3)	1.46 (37.1)	2.63 (66.8)	2.43 (61.7)	1.995 (50.67)
P200NBK	P200NGY	2 (53)	2 (53)	3.05 (77.4)	2.51 (63.6)	.079 (20.1)	1.90 (48.3)	3.13 (79.5)	2.93 (74.4)	2.475 (62.86)

*MD = METRIC DESIGNATOR, A/C = ACCROSS CORNERS, A/F = ACROSS FLATS

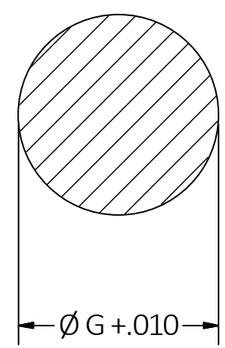

SUGGESTED CLEARANCE HOLE
FOR NON THREADED MOUNTING

NOTES:
1. MATERIAL: 6/6 NYLON
2. TEMPERATURE RANGE: -30°F (-34°C) TO 225°F (107°C).
3. COLORS: SEE TABLE
4. RoHS COMPLIANCE: CONNECTORS MEET EU DIRECTIVE 2005/95/EC INCLUDING AMENDMENT 2005/618/EC.
5. AGENCY APPROVALS - UL LISTED AND CSA CERTIFIED.
6. PRIMARY DIMENSIONS ARE INCHES. UNITS IN SI ARE PROVIDED AS REFERENCE ONLY.
7. TOLERANCES: XX±.02, XXX±.005, ANGLES ±1°. GENERAL TOLERANCES DO NOT APPLY.

CAGE CODE 74545

LIST OF PARTS

DESCRIPTION	MATERIAL	FINISH
CONNECTOR BODY	NYLON	BLACK/GRAY
O-RING	NEOPRENE	BLACK
LOCK NUT	STEEL	ZINC PLATE
COMPRESSION NUT	NYLON	BLACK/GRAY

REV	DESCRIPTION	APP	DATE
1	NEW RELEASE PER DCN 22362 MYA	FFS	9/21/16

THE DESIGN AND DIMENSIONS OF THE PRODUCT SHOWN ON THIS DRAWING ARE SUBJECT TO CHANGE WITHOUT NOTICE. DIMENSIONS ARE IN INCHES [mm].

TITLE

LIQUID-TIGHT NON- METALLIC STRAIGHT FITTING

WIRING DEVICE-KELLEMS
HUBBELL INCORPORATED
SHELTON, CT

TOLERANCES UNLESS OTHERWISE SPECIFIED
.XX = ± .01
.XXX= ± .005
ANGLE TOL. ±2'

DR. BY	MALLEN	SCALE	1 : 1
CHK. BY	FFS	DATE	9/21/16

DIMENSION SHEET FOR CAT. NO.

B

M-13461

1