M-10080 | 4

PANEL CUTOUT

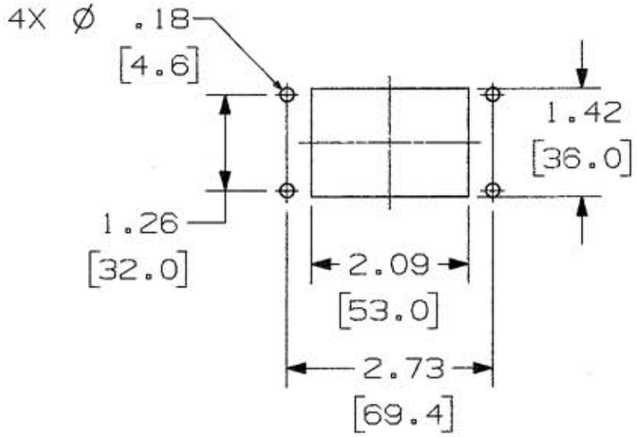

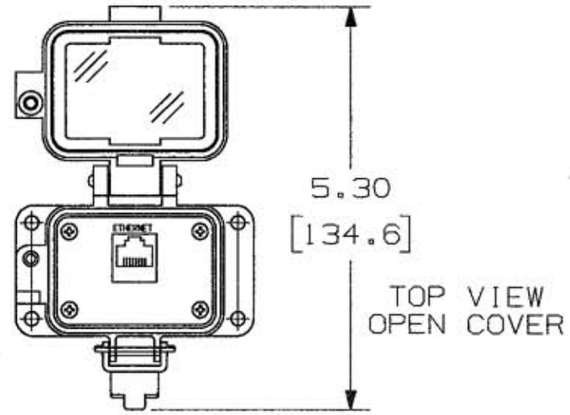

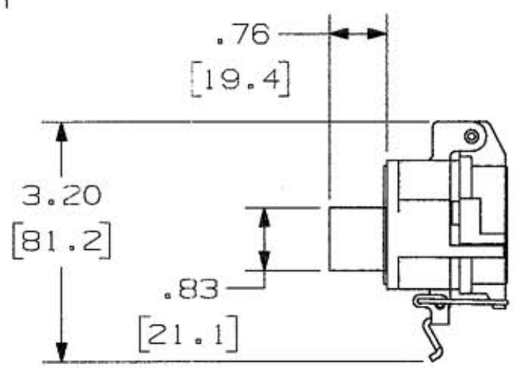

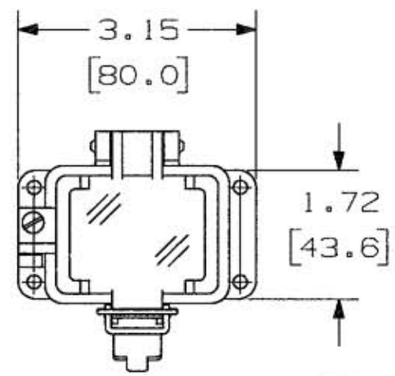

TOP VIEW
CLOSED COVER

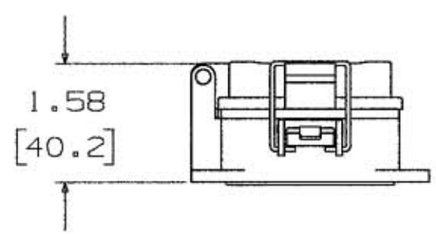

NOTE:
1. DIMENSIONS ARE NOMINAL VALUES AND SHOWN IN INCH [mm] UNITS. DIMENSIONS ARE FOR REFERENCE ONLY.

CATALOG	ENCLOSURE RATING	DESCRIPTION
P5E	NEMA 4	CAT 5E, ETHERNET
P4X5E	NEMA 4X	CAT 5E, ETHERNET

LIST OF PARTS

DESCRIPTION	MATERIAL	FINISH

SYM	REVISIONS	APP	DATE
4	DIM. NOTE WAS,"NOMINAL DIM. -FOR REF. ONLY". REMOVE SUPPLIER LOGO, PART NO. & PRODUCT NAME FROM TOP VIEW. RELOCATED ALL VIEWS. NOW 4X Ø .18 WAS Ø .09 DCN 14126 GPK	JPP	7/31/07
3	NEMA 4 WAS NEMA 12/4 PER DCN 13470 RCM	SML	2/8/07
2	ADDED NOTE PER DCN 13221. ABS	SML	6/29/06
1	INITIAL RELEASE PER DCN. 13051	SML	

THE DESIGN AND DIMENSIONS OF THE PRODUCT SHOWN ON THIS DRAWING ARE SUBJECT TO CHANGE WITHOUT NOTICE

TITLE PANEL-SAFE CAT 5E ETHERNET NEMA 4, 4X

TOLERANCES UNLESS OTHERWISE SPECIFIED
FRACTIONS ±1/64
DECIMALS ±.005
ANGLES ±2°

WIRING DEVICE-KELLEMS
HUBBELL INCORPORATED
BRIDGEPORT, CT

DR. BY TJV | APP. BY SML
TR. BY | SCALE 1:2
CHK'D BY SML | DATE 3-22-06

DIMENSION SHEET FOR CAT. NO.

REPAIRABLE ☐ NON-REPAIRABLE ☐

B

M-10080

4

CODE 74545