M-8057 2

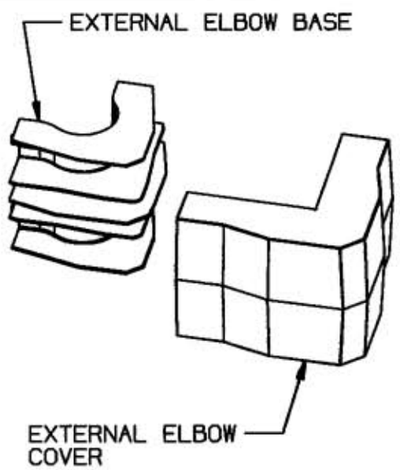

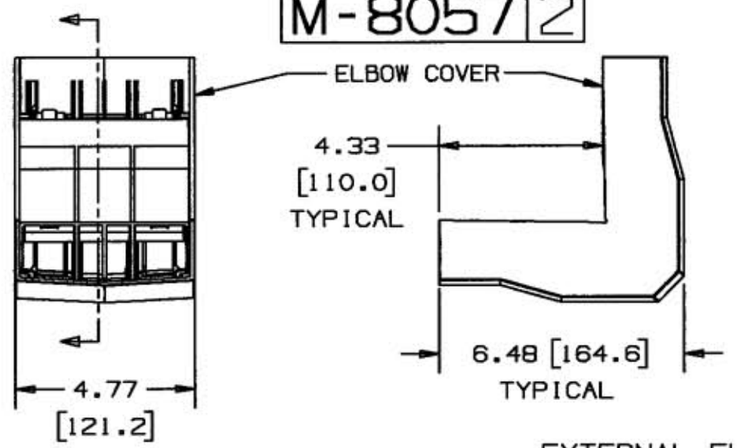

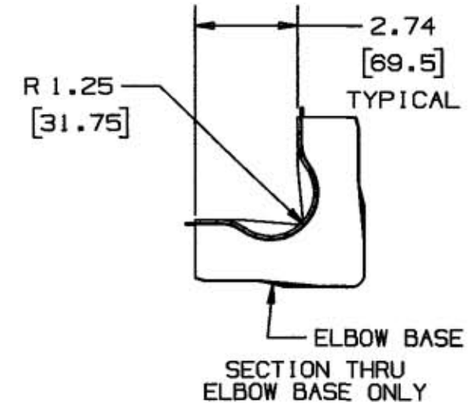

EXTERNAL ELBOW, COVER ONLY - PB3EE
EXT. ELBOW, BASE & COVER - PB3EEBCA

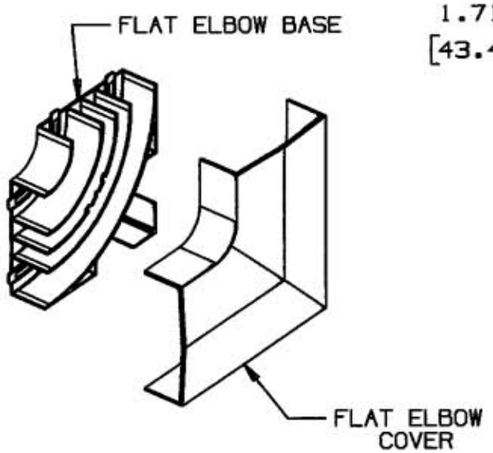

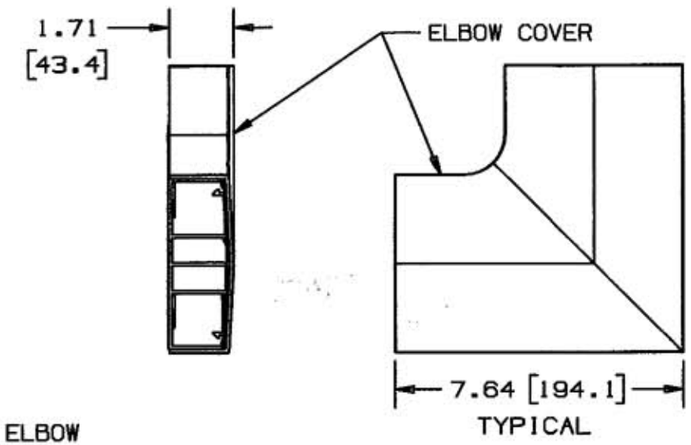

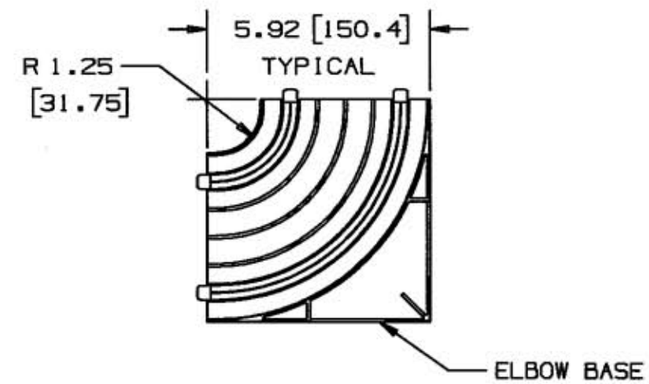

FLAT ELBOW, COVER ONLY - PB3FE
FLAT ELBOW, BASE & COVER - PB3FEBCA

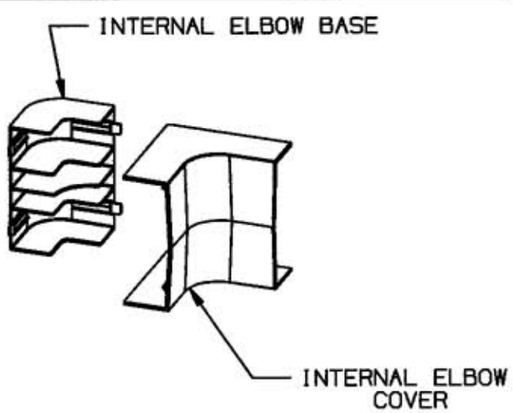

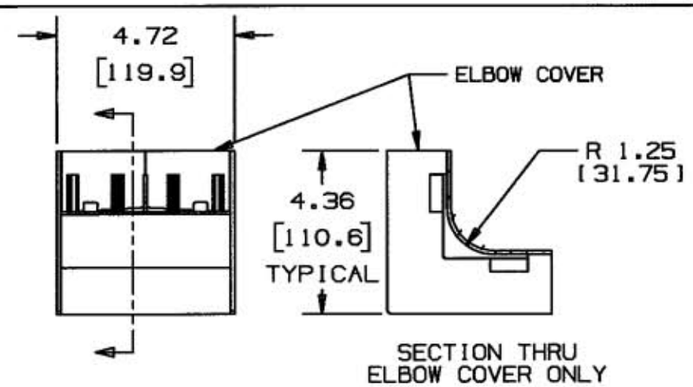

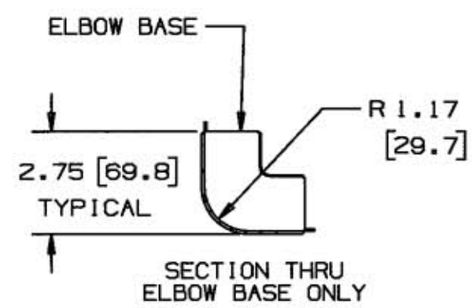

INTERNAL ELBOW, COVER ONLY - PB3IE
INTERNAL ELBOW, BASE & COVER - PB3IEBCA

NOTE: ALL DIMENSIONS IN INCHES AND [MM]

CODE 74545

LIST OF PARTS

DESCRIPTION	MATERIAL	FINISH
EXTERNAL ELBOW BASE	PVC	OFFICE WHITE
EXTERNAL ELBOW COVER	PVC	OFFICE WHITE
FLAT ELBOW BASE	PVC	OFFICE WHITE
FLAT ELBOW COVER	PVC	OFFICE WHITE
INTERNAL ELBOW BASE	PVC	OFFICE WHITE
INTERNAL ELBOW COVER	PVC	OFFICE WHITE

DIMENSION SHEET FOR CAT. NO.
SEE DRAWING

REPAIRABLE ☐ NON-REPAIRABLE ☒

SYM	REVISIONS	APP	DATE
2	REVISED PER DCN11790	SRE	6/9/04
1	RELEASED PER DCN 9305	SRE	5/1/02

THE DESIGN AND DIMENSIONS OF THE PRODUCT SHOWN ON THIS DRAWING ARE SUBJECT TO CHANGE WITHOUT NOTICE

TITLE
ELBOWS
BASETRAK

TOLERANCES UNLESS OTHERWISE SPECIFIED
FRACTIONS ±1/64
DECIMALS ±.005
ANGLES ±2°

WIRING DEVICE-KELLEMS
HUBBELL INCORPORATED
BRIDGEPORT, CT

DR. BY	SRE	APP. BY	SRE
TR. BY		SCALE	---
CHK'D BY	SRE	DATE	9/27/01

M-8057 B 2