M-8179 1

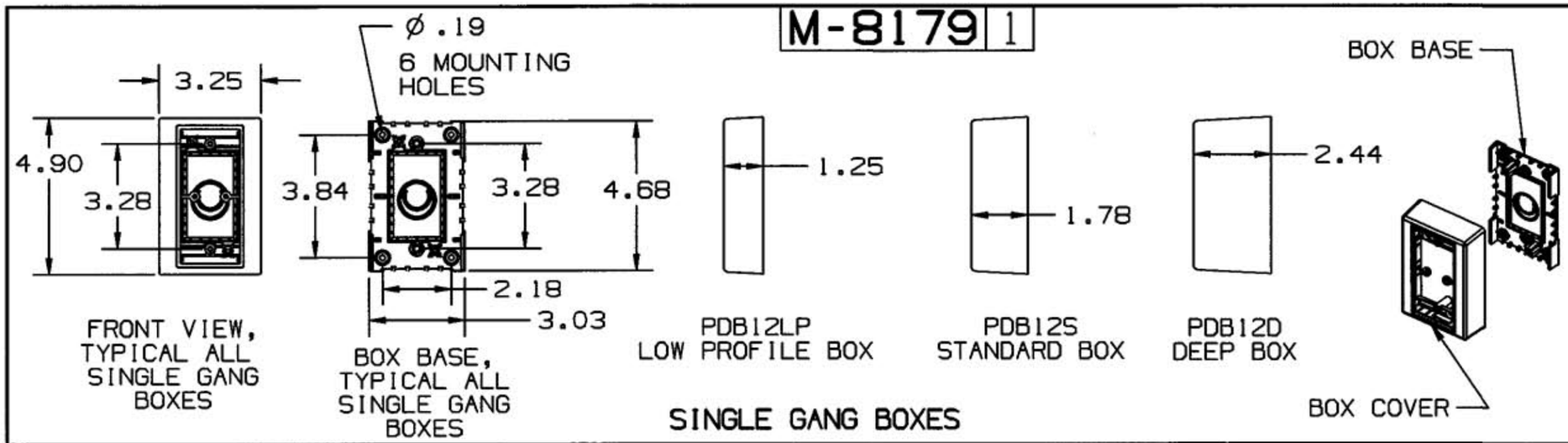

SINGLE GANG BOXES

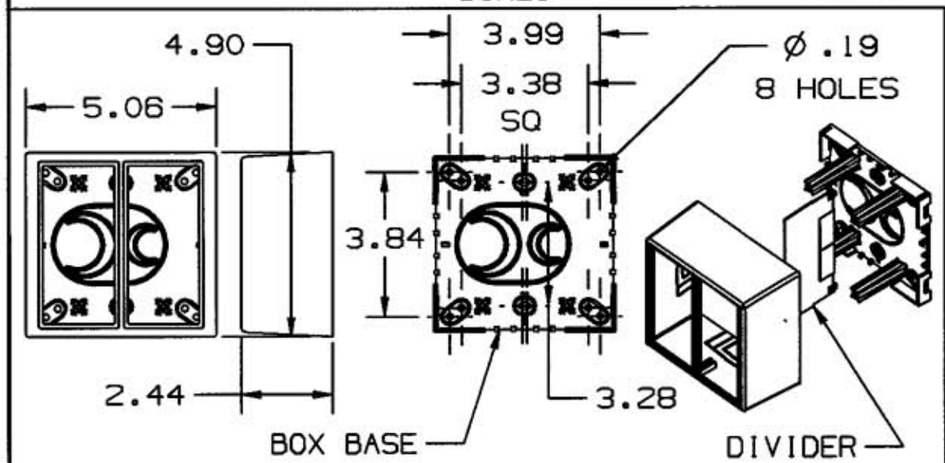

PDBTGD - TWO GANG BOX, DIVIDED

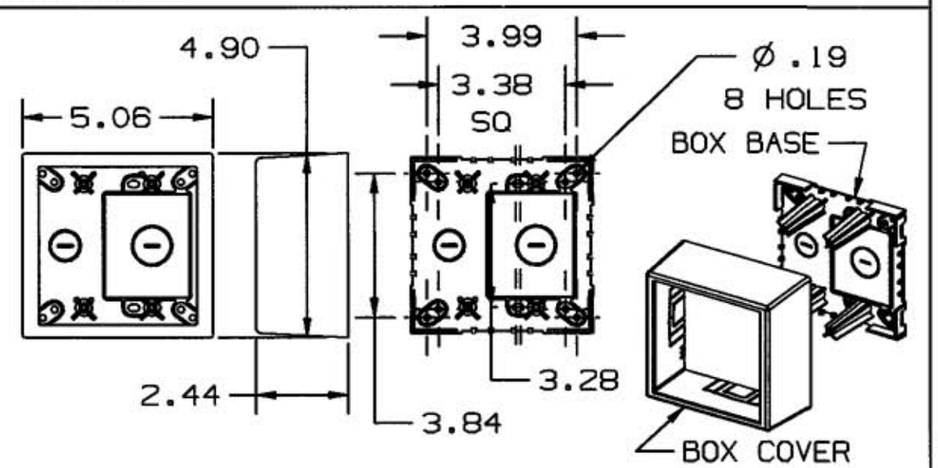

PDBTGLV -TWO GANG BOX, LOW VOLTAGE

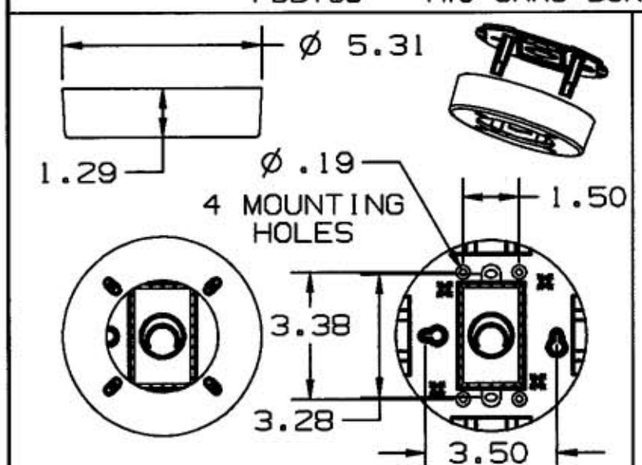

PDBLF
LIGHT FIXTURE BOX

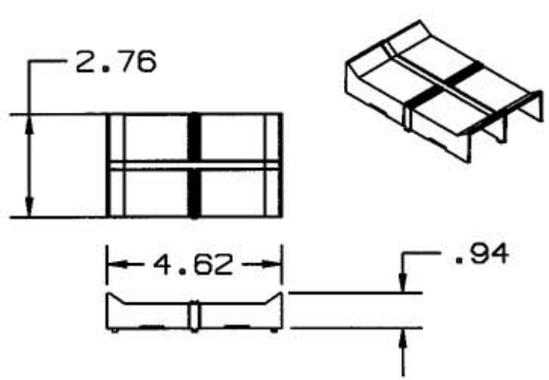

PDB2DIV
TWO GANG BOX DIVIDER, USED ONLY WITH PDBTGD

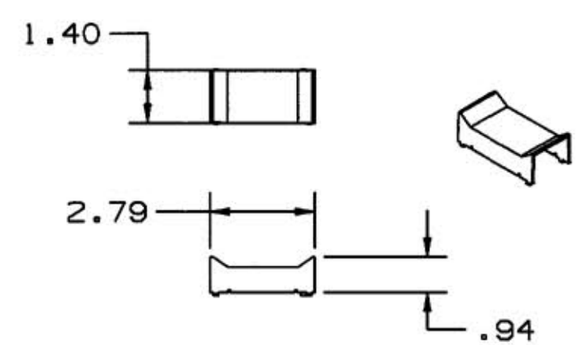

PDB1DIV
SINGLE GANG BOX DIVIDER, USE WITH SINGLE GANG BOXES

LIST OF PARTS

DESCRIPTION	MATERIAL	FINISH
DEVICE BOX BASE, SINGLE	PVC	OFFICE WHITE
DEVICE BOX COVER, SINGLE	PVC	OFFICE WHITE
DEVICE BOX BASE, TWO GANG	PVC	OFFICE WHITE
DEVICE BOX COVER, TWO GANG	PVC	OFFICE WHITE
DEVICE BOX DIVIDER, SINGLE	PVC	OFFICE WHITE
DEVICE BOX DIVIDER, TWO GANG	PVC	OFFICE WHITE
LIGHT FIXTURE BASE	PPO	WHITE
LIGHT FIXTURE COVER	PVC	OFFICE WHITE

SYM	REVISIONS	APP	DATE
1	RELEASED PER DCN 7604	SRE	4/28/00

THE DESIGN AND DIMENSIONS OF THE PRODUCT SHOWN ON THIS DRAWING ARE SUBJECT TO CHANGE WITHOUT NOTICE

TITLE
DEVICE BOXES

TOLERANCES UNLESS OTHERWISE SPECIFIED
FRACTIONS ±1/64
DECIMALS ±.005
ANGLES ±2°

WIRING DEVICE-KELLEMS
HUBBELL INCORPORATED
BRIDGEPORT, CT

DR. BY SRE	APP. BY SRE
TR. BY	SCALE ----
CHK'D BY SRE	DATE 8/13/99

CODE 74545

DIMENSION SHEET FOR CAT. NO.

REPAIRABLE ☐ NON-REPAIRABLE ☒

B

M-8179

1