M-8181 1

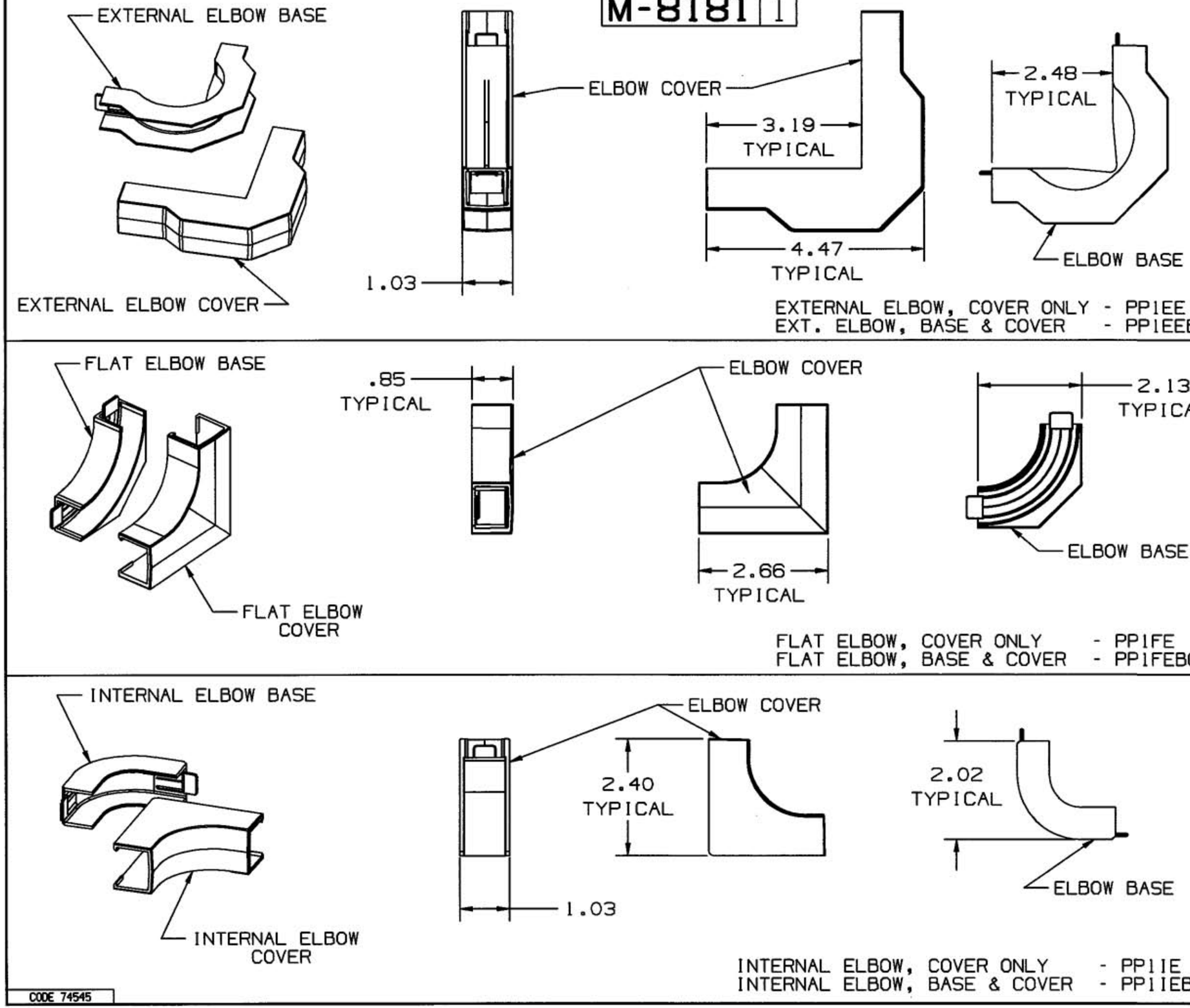

LIST OF PARTS

DESCRIPTION	MATERIAL	FINISH
EXTERNAL ELBOW BASE	PVC	OFFICE WHITE
EXTERNAL ELBOW COVER	PVC	OFFICE WHITE
FLAT ELBOW BASE	PVC	OFFICE WHITE
FLAT ELBOW COVER	PVC	OFFICE WHITE
INTERNAL ELBOW BASE	PVC	OFFICE WHITE
INTERNAL ELBOW COVER	PVC	OFFICE WHITE

SYM	REVISIONS	APP	DATE
1	RELEASED PER DCN 7604	SRE	4/28/00

THE DESIGN AND DIMENSIONS OF THE PRODUCT SHOWN ON THIS DRAWING ARE SUBJECT TO CHANGE WITHOUT NOTICE

TITLE
ELBOWS
PP1 PREMISETRAK

TOLERANCES UNLESS OTHERWISE SPECIFIED
FRACTIONS ±1/64
DECIMALS ±.005
ANGLES ±2°

WIRING DEVICE-KELLEMS
HUBBELL INCORPORATED
BRIDGEPORT, CT

DR. BY SRE	APP. BY SRE
TR. BY	SCALE ---
CHK'D BY SRE	DATE 8/12/99

DIMENSION SHEET FOR CAT. NO.

REPAIRABLE ☐ NON-REPAIRABLE ☒

B

M-8181

1

CODE 74545