M-12076 | 1

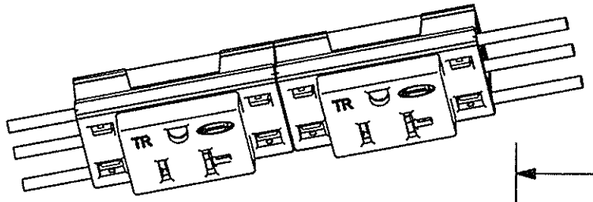

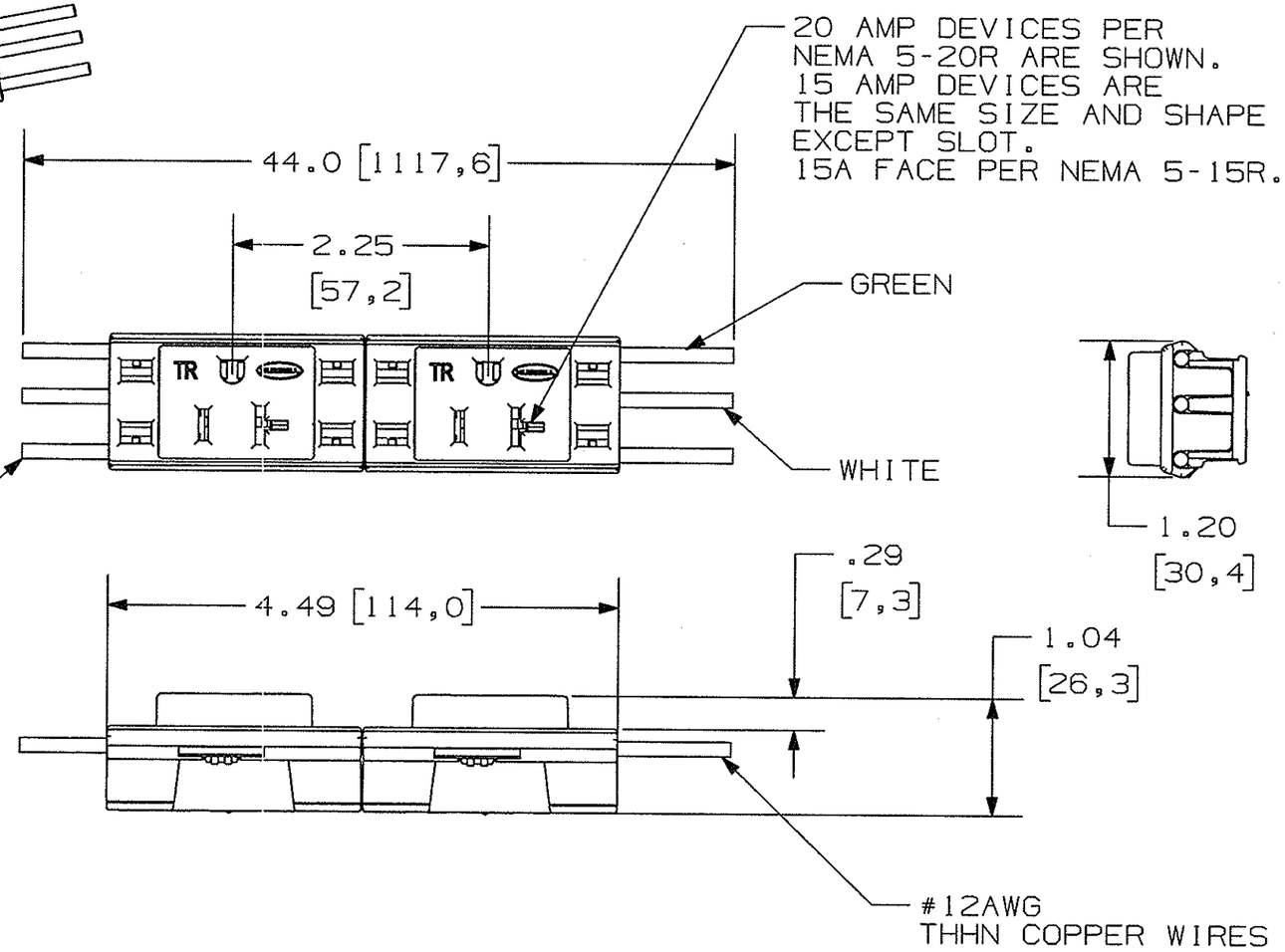


| TAMPER RESISTANT DUPLEX RECEPTACLES | | |
|---|---|---|
| CATALOG NUMBER | COLOR | AMPERAGE |
| PT15R20WTR | OFFICE WHITE | 15A |
| PT20R20WTR | OFFICE WHITE | 20A |
| PT15R21GTR | ORANGE | 15A |
| PT20R21GTR | ORANGE | 20A |

NOTE: IG RECEPTACLES ARE MARKED "ISOLATED GROUND"

ALL DIMENSIONS ARE IN INCHES AND [MILLIMETERS]

CODE 74545

LIST OF PARTS

| DESCRIPTION | MATERIAL | FINISH |
|---|---|---|
| RECEPTACLE FACE | PVC | SEE CHART |
| RECEPTACE BASE | PVC | SEE CHART |
| WIRE | COPPER | ----- |
| CONTACTS | COPPER ALLOY | ----- |

DIMENSION SHEET FOR CAT. NO. SEE CHARTS

REPAIRABLE ☐ NON-REPAIRABLE ☒

| SYM | REVISIONS | APP | DATE |
|---|---|---|---|
| 1 | RELEASED PER DCN18223 | | 8/2/11 |

THE DESIGN AND DIMENSIONS OF THE PRODUCT SHOWN ON THIS DRAWING ARE SUBJECT TO CHANGE WITHOUT NOTICE

TITLE
PLUGTRAK RECEPTACLES, TAMPER RESISTANT, DUPLEX FACES

TOLERANCES UNLESS OTHERWISE SPECIFIED
FRACTIONS ±1/64
DECIMALS ±.005
ANGLES ±2°

WIRING DEVICE-KELLEMS
HUBBELL INCORPORATED
BRIDGEPORT, CT

| | |
|---|---|
| DR. BY SRE | APP. BY |
| TR. BY | SCALE 1:2 |
| CHK'D BY | DATE 8/2/11 |

B

M-12076

1