M-9297 3

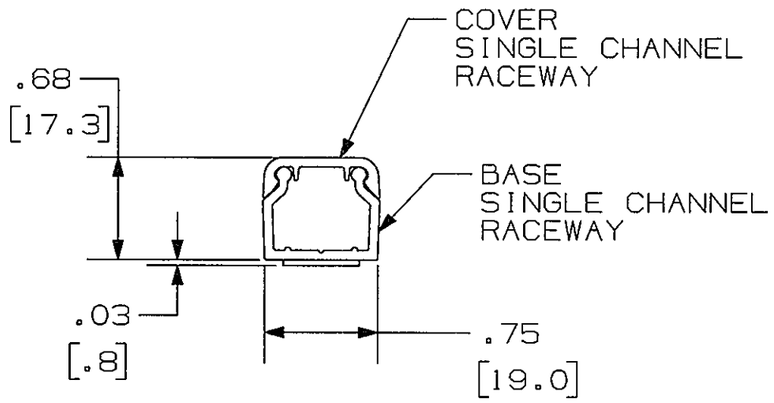

RACEWAY - 5 FT = PT1BC5
RACEWAY - 7 FT = PT1BC7
RACEWAY, WITH ADHESIVE, 5 FT = PT1ABC5
RACEWAY, WITH ADHESIVE, 7 FT = PT1ABC7

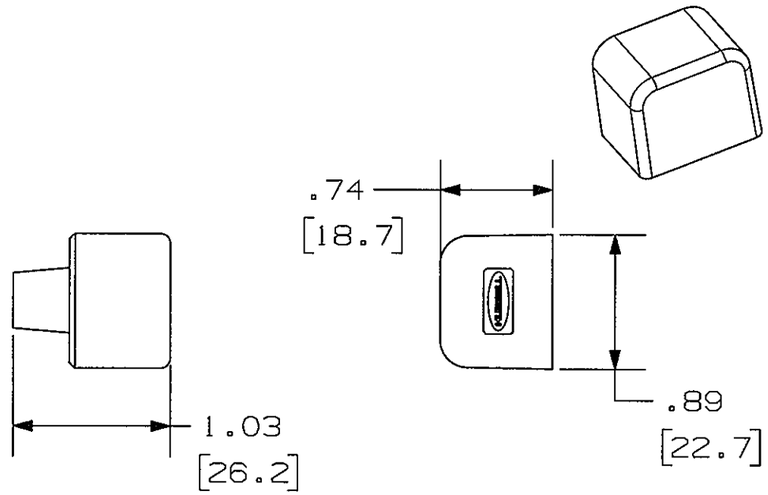

END CAP

PT1EC

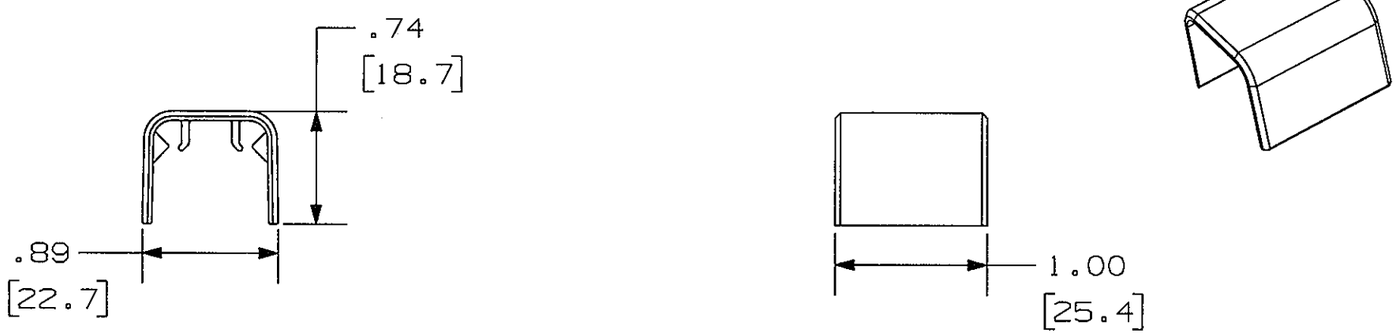

SPLICE COVER

PT1SC

NOTES:
1. DIMENSIONS ARE IN INCHES AND [mm].
2. NOT FOR USE WITH RW90 CONDUCTOR.

CODE 74545

LIST OF PARTS

DESCRIPTION	MATERIAL	FINISH
RACEWAY	PVC	OFFICE WHITE
END CAP	PVC	OFFICE WHITE
SPLICE COVER	PVC	OFFICE WHITE

SYM	REVISIONS	APP	DATE
3	ADDED NOTE 2 PER DCN 22260; RM DJP	DJP	7/14/16
2	UPDATED COMPONENTS IN VIEWS PER DCN 20220 SPN	DJP	12/13/13
1	RELEASED PER DCN 11559	MYA	2/23/04

THE DESIGN AND DIMENSIONS OF THE PRODUCT SHOWN ON THIS DRAWING ARE SUBJECT TO CHANGE WITHOUT NOTICE

TITLE
RACEWAY & FITTINGS
PREMISETRAK

TOLERANCES UNLESS OTHERWISE SPECIFIED
.XX = ±.01
.XXX = ±.005
ANGLES = ±2°

WIRING DEVICE-KELLEMS
HUBBELL INCORPORATED
SHELTON, CT

DR. BY MYA	APP. BY TCM
TR. BY	SCALE 1:1
CHK. BY TCM	DATE 2/23/04

DIMENSION SHEET FOR CAT. NO. SEE SHEET

REPAIRABLE ☐ NON-REPAIRABLE ☐

B

M-9297

3