M-10339 2

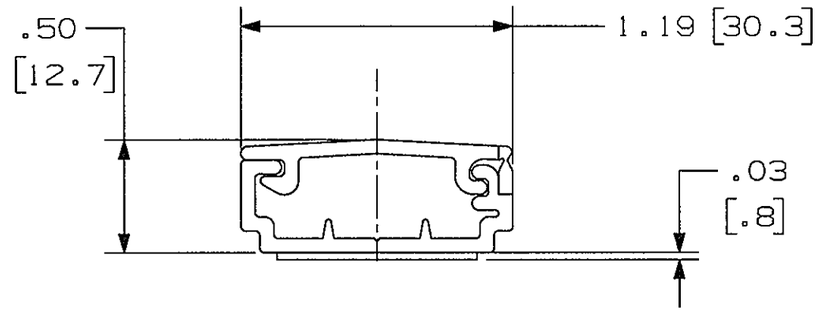

RACEWAY - 5 FT = PW1BC5
RACEWAY - 7 FT = PW1BC7
RACEWAY, WITH ADHESIVE, 5FT = PW1ABC5
RACEWAY, WITH ADHESIVE, 7FT = PW1ABC7

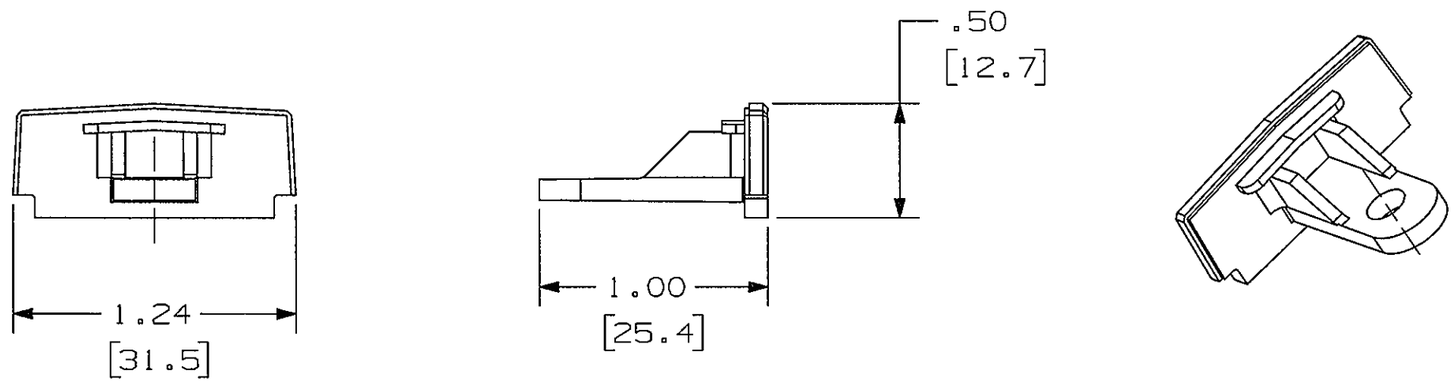

END CAP - CAT. NO. PWIEC

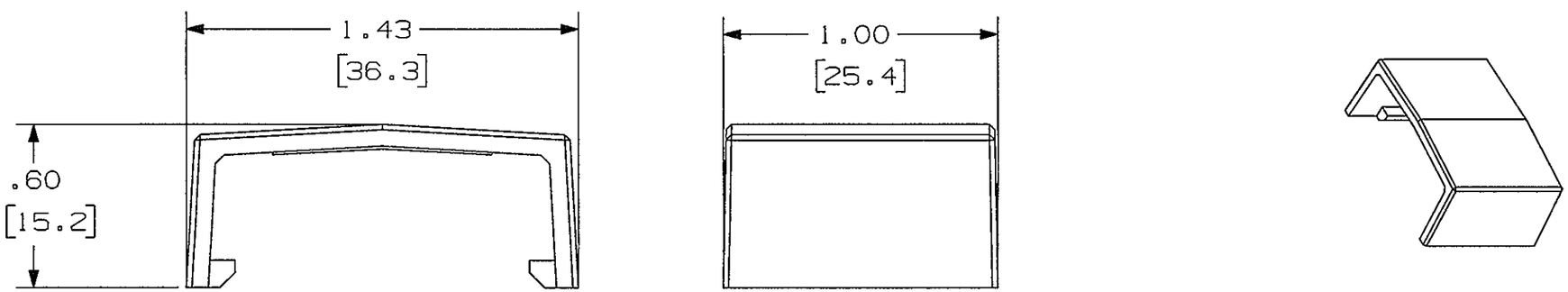

SPLICE COVER - CAT. NO. PWISC

NOTES:
1. ALL DIMENSIONS IN INCHES AND [mm].
2. NOT FOR USE WITH RW90 CONDUCTOR.

CODE 74545

LIST OF PARTS

DESCRIPTION	MATERIAL	FINISH
RACEWAY	PVC	OFFICE WHITE
END CAP	PVC	OFFICE WHITE
SPLICE COVER	PVC	OFFICE WHITE

SYM	REVISIONS	APP	DATE
2	ADDED NOTE 2. PER DCN 22260; RM	DJP	7/14/16
1	RELEASED PER DCN13445		10/6/06

THE DESIGN AND DIMENSIONS OF THE PRODUCT SHOWN ON THIS DRAWING ARE SUBJECT TO CHANGE WITHOUT NOTICE

TITLE
RACEWAY & FITTINGS
PW1 WALLTRAK

TOLERANCES UNLESS OTHERWISE SPECIFIED
.XX = ±.01
.XXX = ±.005
ANGLES = ±2°

WIRING DEVICE-KELLEMS
HUBBELL INCORPORATED
SHELTON, CT

DR. BY SRE	APP. BY
TR. BY	SCALE NONE
CHK. BY	DATE 10/6/06

DIMENSION SHEET FOR CAT. NO. SEE SHEET

REPAIRABLE ☐ NON-REPAIRABLE ☒

B

M-10339

2