M-10338 | 1

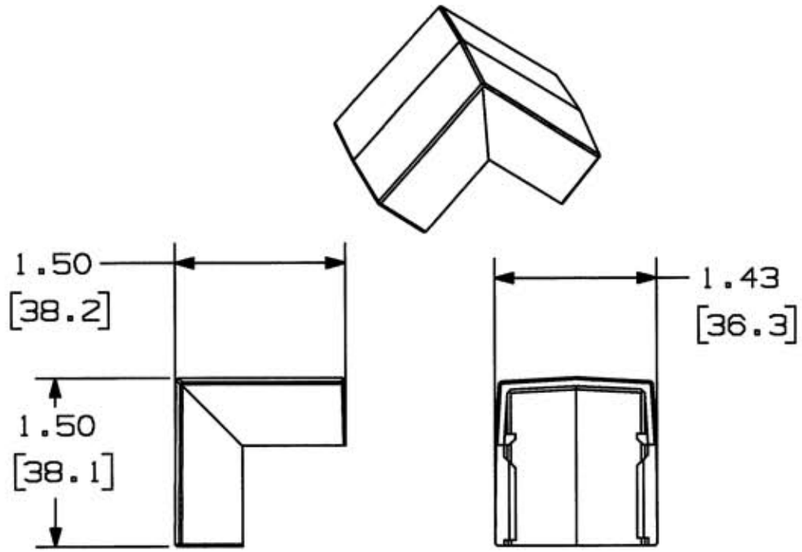

EXTERNAL ELBOW
CAT. NO. PW1EE

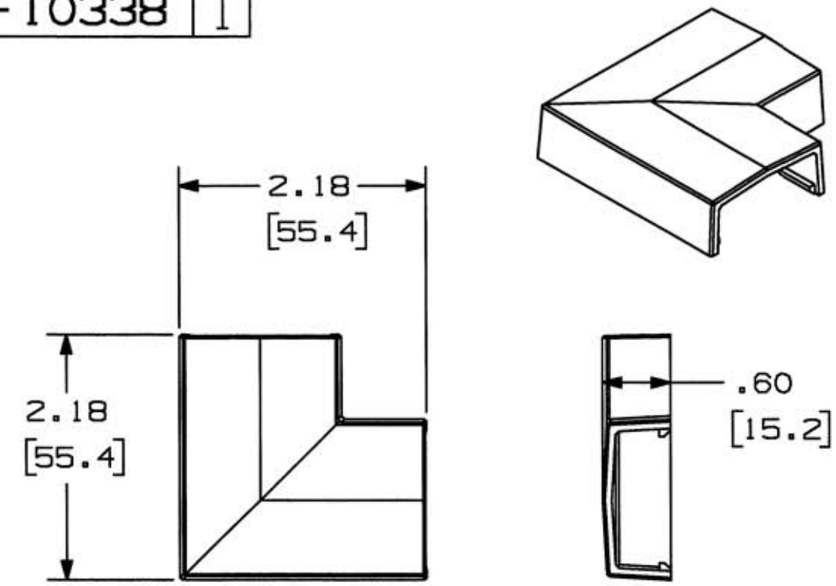

FLAT ELBOW
CAT. NO. PW1FE

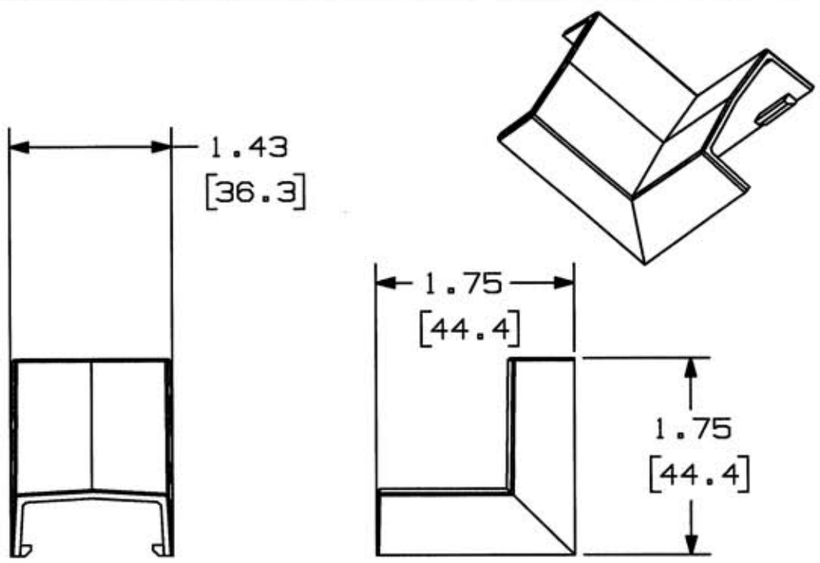

INTERNAL ELBOW
CAT. NO. PW1IE

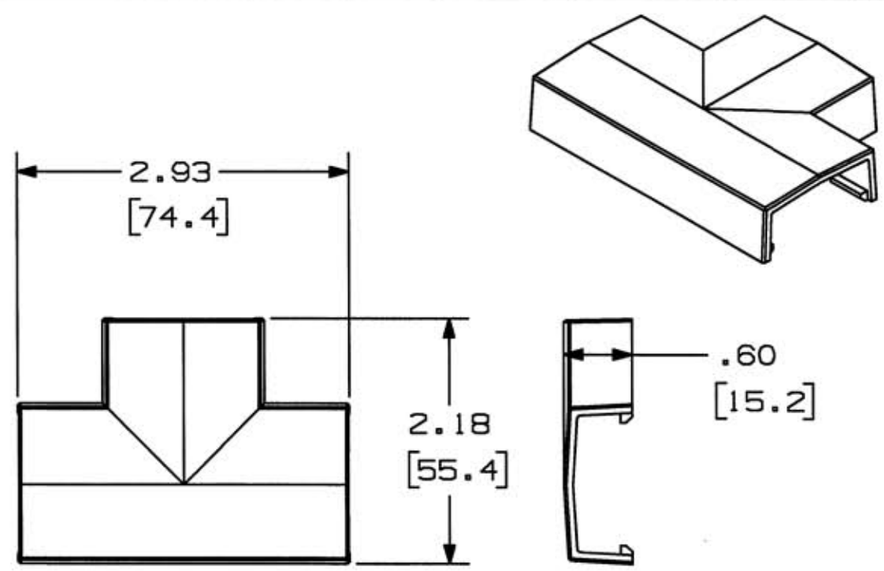

TEE
CAT. NO. PW1TC

ALL DIMENSIONS IN INCHES AND [MILLIMETERS]

CODE 74545

LIST OF PARTS

DESCRIPTION	MATERIAL	FINISH
EXTERNAL ELBOW	PVC	OFFICE WHITE
FLAT ELBOW	PVC	OFFICE WHITE
INTERNAL ELBOW	PVC	OFFICE WHITE
TEE	PVC	OFFICE WHITE

SYM	REVISIONS	APP	DATE
1	RELEASED PER DCN13445		10/6/06

THE DESIGN AND DIMENSIONS OF THE PRODUCT SHOWN ON THIS DRAWING ARE SUBJECT TO CHANGE WITHOUT NOTICE

TITLE
ELBOWS &TEE
PW1 WALLTRAK

TOLERANCES UNLESS OTHERWISE SPECIFIED
FRACTIONS ±1/64
DECIMALS ±.005
ANGLES ±2°

WIRING DEVICE-KELLEMS
HUBBELL INCORPORATED
BRIDGEPORT, CT

DR. BY SRE	APP. BY
TR. BY	SCALE NONE
CHK'D BY	DATE 10/6/06

DIMENSION SHEET FOR CAT. NO. SEE SHEET

REPAIRABLE ☐ NON-REPAIRABLE ☒

B

M-10338

1