M-8300 2

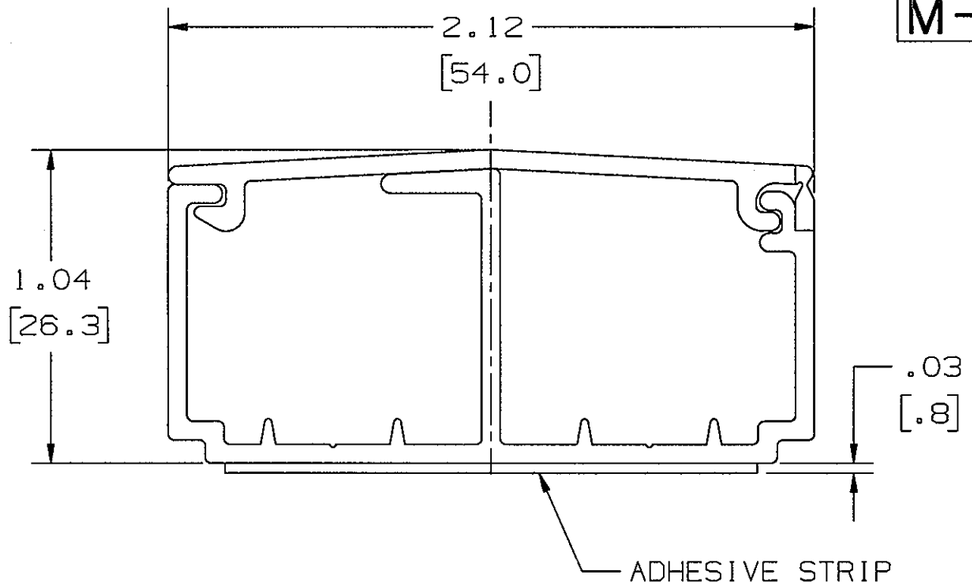

RACEWAY - 5 FT = PW2BC5
RACEWAY - 7 FT = PW2BC7
RACEWAY, WITH ADHESIVE, 5 FT = PW2ABC5
RACEWAY, WITH ADHESIVE, 7 FT = PW2ABC7

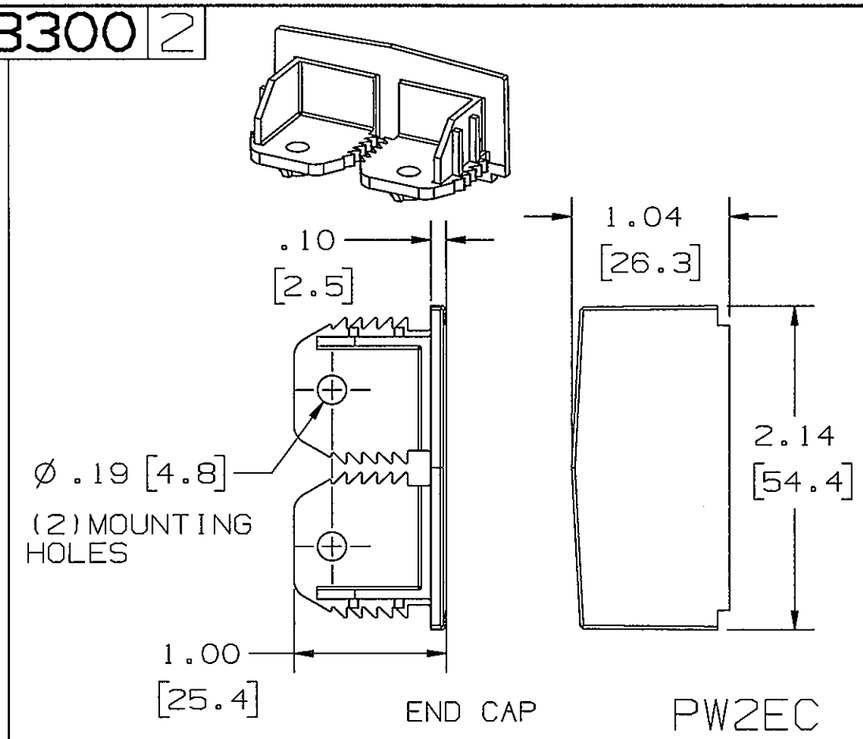

END CAP PW2EC

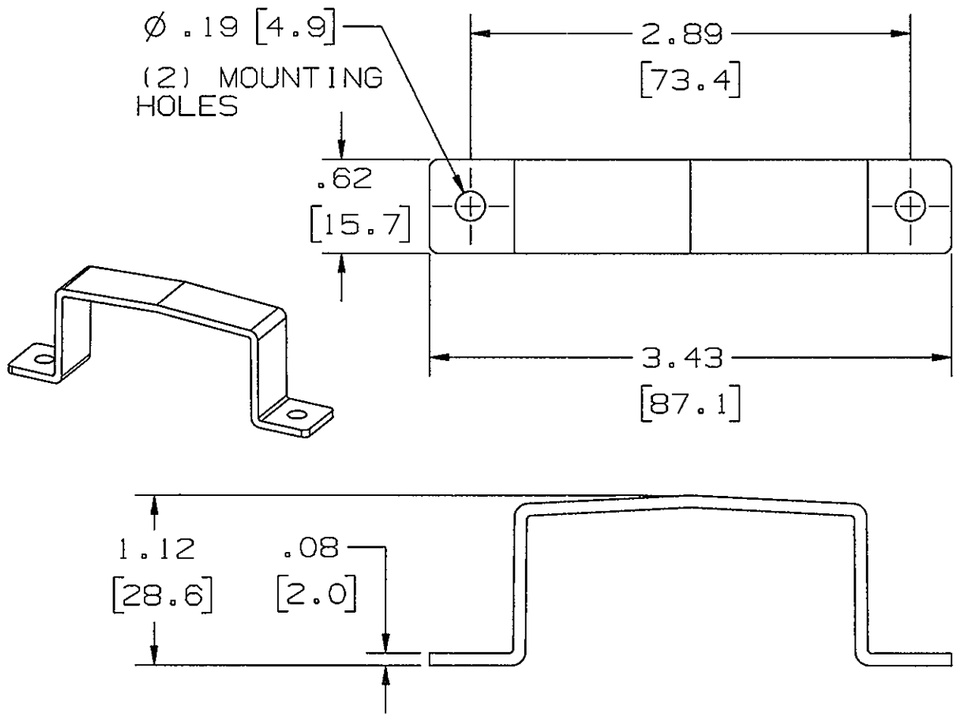

SECURITY STRAP/SPLICE COVER PW2SS

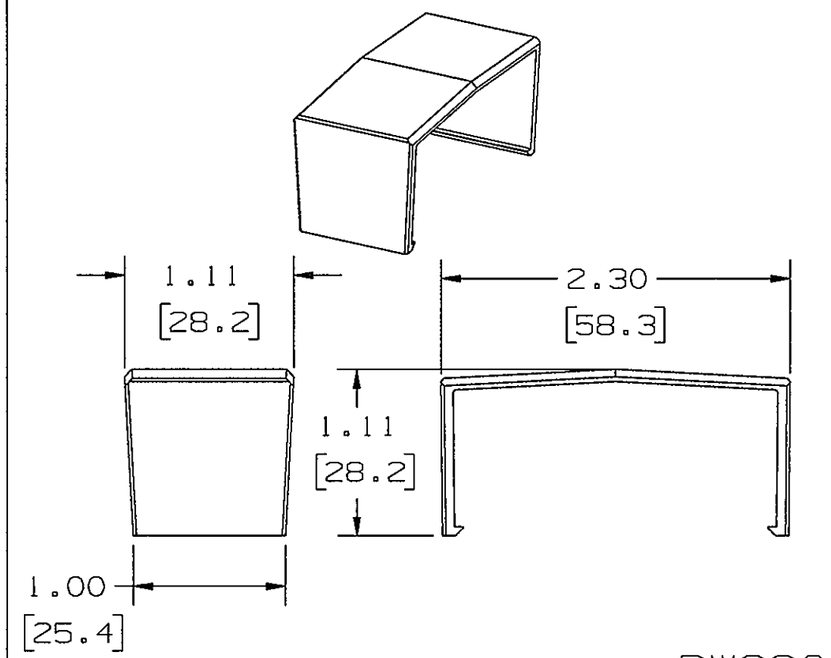

SPLICE COVER PW2SC

NOTES:
1. DIMENSIONS ARE IN INCHES AND [mm].
2. NOT FOR USE WITH RW90 CONDUCTOR.

LIST OF PARTS

DESCRIPTION	MATERIAL	FINISH
RACEWAY	PVC	OFFICE WHITE
END CAP	PVC	OFFICE WHITE
SPLICE COVER	PVC	OFFICE WHITE
SECURITY STRAP/SPLICE COVER	PVC	OFFICE WHITE

SYM	REVISIONS	APP	DATE
2	ADDED [mm] DIMENSIONS ADDED NOTES PER DCN 22260; RM DJP	DJP	7/14/16
1	RELEASED PER DCN 8066	SRE	10/13/00

THE DESIGN AND DIMENSIONS OF THE PRODUCT SHOWN ON THIS DRAWING ARE SUBJECT TO CHANGE WITHOUT NOTICE

TITLE
RACEWAY & FITTINGS, PW2 WALLTRAK

TOLERANCES UNLESS OTHERWISE SPECIFIED
.XX = ± .01
.XXX = ± .005
ANGLES = ± 2°

WIRING DEVICE-KELLEMS
HUBBELL INCORPORATED
SHELTON, CT

DR. BY SRE	APP. BY SRE
TR. BY	SCALE ---
CHK. BY SRE	DATE 4/20/00

DIMENSION SHEET FOR CAT. NO. SEE SHEET

REPAIRABLE ☐ NON-REPAIRABLE ☒

B

M-8300

N

CODE 74545