M-10551 | 2

ROTARY DIMMER CONTROLS

SINGLE POLE CATALOG NO.	THREE-WAY CATALOG NO.	COLOR	RATING
RD600RI	-------	IVORY	600W 120V AC
RD600RW	-------	WHITE	
*RD600PDK	*RD603PDK	IVORY/WHITE	

*CONTROL KNOBS INCLUDED FOR BOTH IVORY & WHITE

ROTARY FAN SPEED CONTORLS

SINGLE POLE CATALOG NO.	COLOR	RATING
	IVORY/WHITE	1.5A 120V AC
~~RF5I~~	IVORY	5A 120V AC
~~RF5W~~	WHITE	5A 120V AC
RFS5LA	LIGHT ALMOND	5A 120V AC
RFS5W	WHITE	5A 120V AC
RFS5I	IVORY	5A 120V AC

*CONTROL KNOBS INCLUDED FOR BOTH IVORY & WHITE

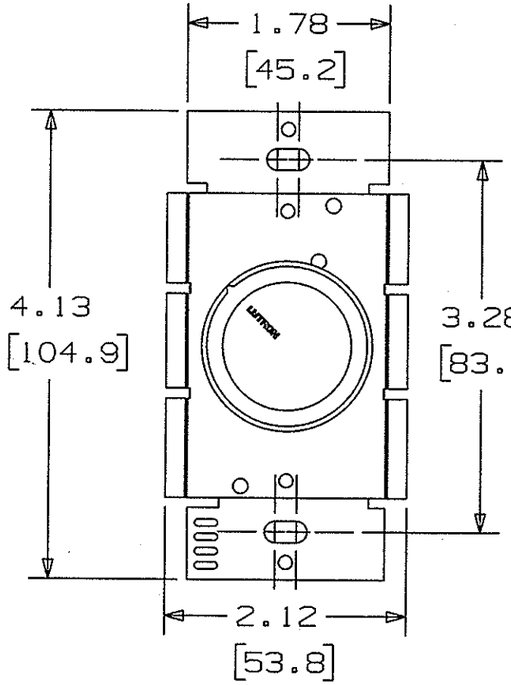

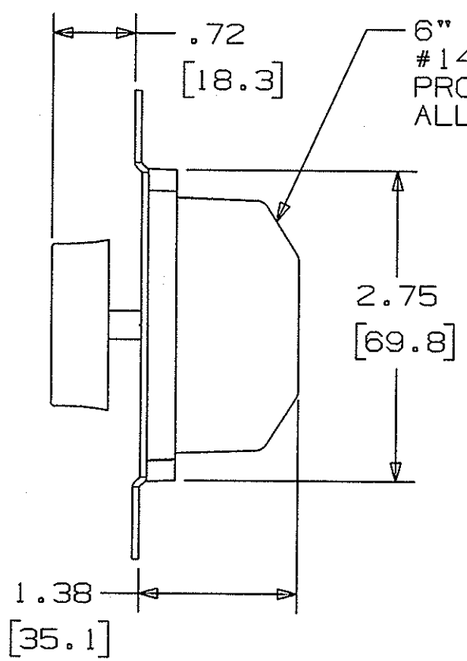

FEATURES:

1. ELECTROSTATIC DISCHARGE PROTECTION
2. MECHANICAL AIR-GAP SWITCH TO DISCONNECT LOAD POWER
3. DERATING REQUIRED IF GANGED
4. UL LISTED & CSA CERTIFIED
5. INCHES [MM]

DERATING CHART

SINGLE GANG	2-GANG	3-GANG
600W	500W	300W
1.5A	1.5A	1.5A
5A	4A	3A

LIST OF PARTS

DESCRIPTION	MATERIAL	FINISH
KNOB	PLASTIC	SEE TABLE
BASE	PLASTIC	BLACK
HEAT SINK	ALUMINUM	

SYM	REVISIONS	APP	DATE
2	DELETED MODEL RF5I & RF5W. ADDED 5A DERATING INFORMATION PER DCN #16815. MZ,TS		7-13-10
1	RELEASED PER DCN 13766		2-15-07

THE DESIGN AND DIMENSIONS OF THE PRODUCT SHOWN ON THIS DRAWING ARE SUBJECT TO CHANGE WITHOUT NOTICE

TITLE
ROTARY DIMMERS & FAN CONTROLS

TOLERANCES UNLESS OTHERWISE SPECIFIED
FRACTIONS ±1/64
DECIMALS ±.005
ANGLES ±2°

WIRING DEVICE-KELLEMS
HUBBELL INCORPORATED
BRIDGEPORT, CT

DR. BY AMZ | APP. BY TLS
TR. BY | SCALE NONE
CHK'D BY | DATE 12/30/06

DIMENSION SHEET FOR CAT. NO. SEE TABLE

REPAIRABLE ☐ NON-REPAIRABLE ☒

B

M-10551

2

CODE 74545