M-10301 | 2

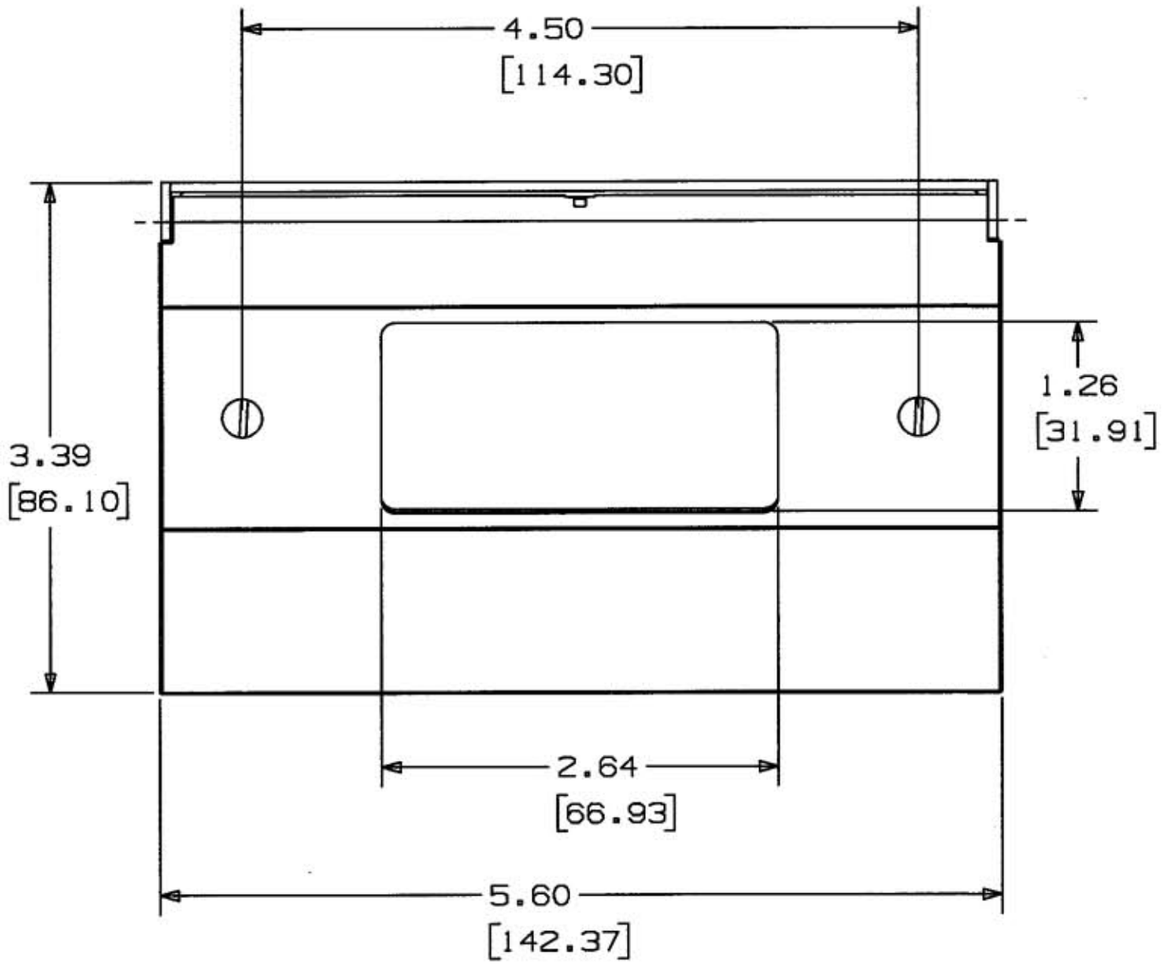

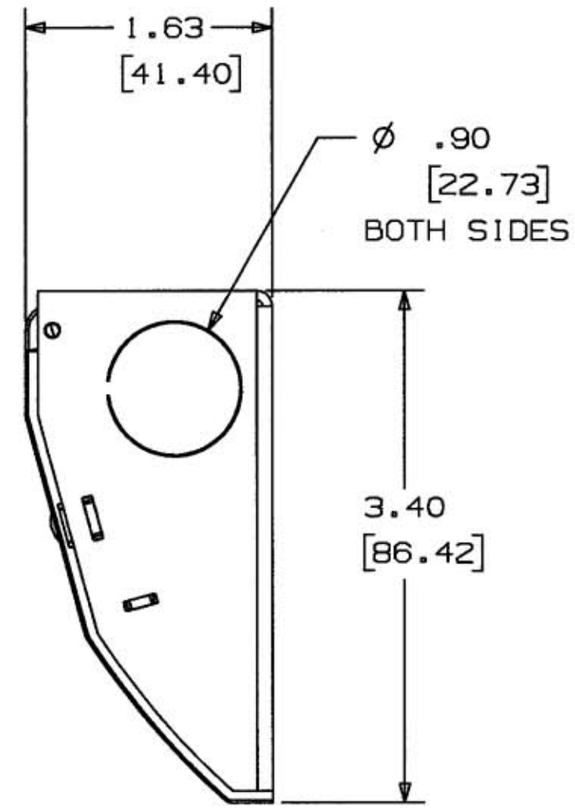

NOTES:

INCLUDES MOUNTING HARDWARE AND SPACERS

DIMENSIONS ARE IN INCHES [MM].

CAT NUMBER	COLOR
RU100SS	STAINLESS STEEL
RU100W	WHITE METAL
RU170W	WHITE NYLON

LIST OF PARTS

DESCRIPTION	MATERIAL	FINISH
BOX	STEEL	Zn OR Ni
COVER	PLASTIC	
COVER	ALUMINUM	PAINT
MOUNTING SCREW	STEEL/SS	PAINT

SYM	REVISIONS	APP	DATE
2	CHANGE COMPANY NAME PER DCN# 13527	FJ	11/3/06
1	08/21/06 RELEASED TO PRODUCTION PER DCN# 13224	FJ	08/21/06

THE DESIGN AND DIMENSIONS OF THE PRODUCT SHOWN ON THIS DRAWING ARE SUBJECT TO CHANGE WITHOUT NOTICE

TITLE

SLIM FIT BOX

TOLERANCES UNLESS OTHERWISE SPECIFIED
FRACTIONS ±1/64
DECIMALS ±.005
ANGLES ±2°

WIRING DEVICE-KELLEMS
HUBBELL INCORPORATED
BRIDGEPORT, CT.

DR. BY AMZ | APP. BY FJ
TR. BY | SCALE NONE
CHK'D BY FJ | DATE 08/25/06

DIMENSION SHEET FOR CAT. NO. SEE TABLE

REPAIRABLE ☐ NON-REPAIRABLE ☒

B

M-10301

2

CODE 74545