M-13189 | 2

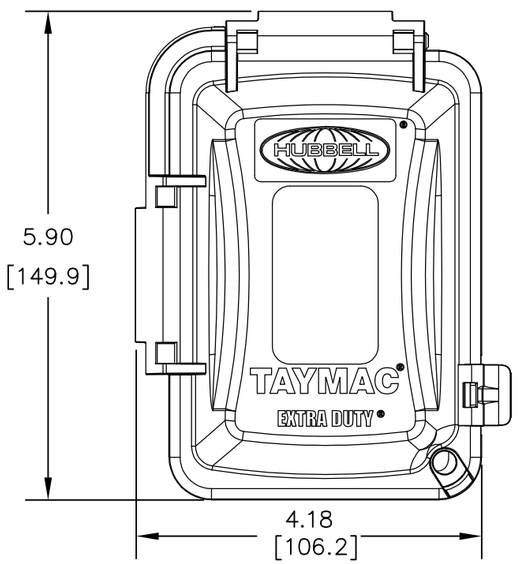

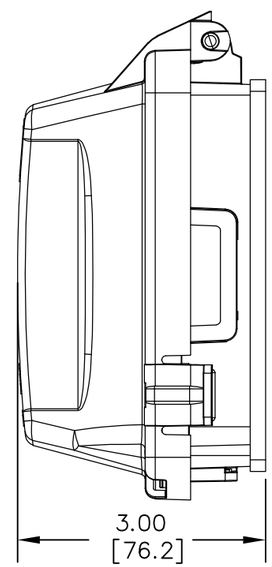

RW58300

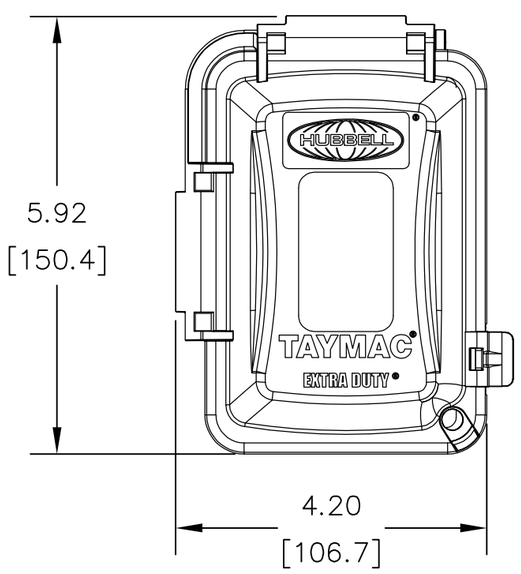

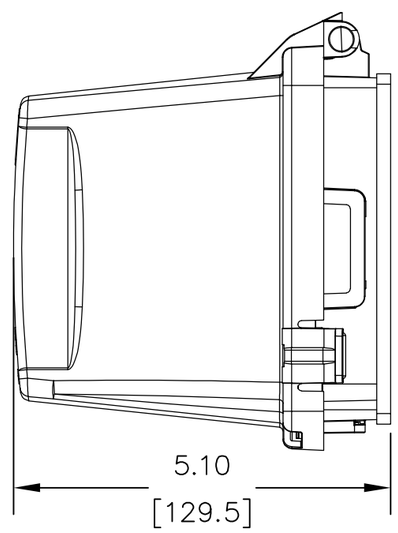

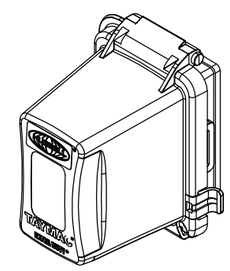

RW58350

NOTES: UNLESS OTHERWISE SPECIFIED
1. KIT INCLUDES: ADAPTOR PLATES FOR SWITCHES, SINGLE, DUPLEX, LOCKING, AND GFCI RECEPTACLES, AND MOUNTING SCREWS.
2. MOUNTED VERTICALLY OR HORIZONTALLY.
3. DIMENSIONS ARE IN INCHES [MM].

CODE 74545

LIST OF PARTS

DESCRIPTION	MATERIAL	FINISH
HOOD	THERMOPLASTIC	CLEAR
BASE	THERMOPLASTIC	GRAY

SYM	REVISIONS	APP	DATE
2	ON CAT. RW58300, DIM 5.90(149.9), 4.18(106.2), 3.00(76.2) WAS (3.93)(99.9),(2.78)(70.6),(2.00)(50.7). ON CAT RW58350, DIM 5.92 (150.4), 4.20(106.7), 5.10(129.5) WAS (2.95)(75.0), (2.10)(53.4),(2.55)(64.7) PER DCN 23613. MYA	MJZ	3/2/18
1	NEW RELEASE PER DCN 21768	DJP	11/6/15

THE DESIGN AND DIMENSIONS OF THE PRODUCT SHOWN ON THIS DRAWING ARE SUBJECT TO CHANGE WITHOUT NOTICE

TITLE
WEATHERPROOF
COVER, IN-USE, 1-GANG

TOLERANCES UNLESS OTHERWISE SPECIFIED
.XX = ±.01
.XXX = ±.005
ANGLES = ±2°

WIRING DEVICE-KELLEMS
HUBBELL INCORPORATED
SHELTON, CT

DR. BY SPN	APP. BY DJP
TR. BY	SCALE NONE
CHK. BY DJP	DATE 11/6/15

DIMENSION SHEET FOR CAT. NO.
RW58300, RW58350

REPAIRABLE ☐
NON-REPAIRABLE ☒

B

M-13189

2