M-11917 | 1

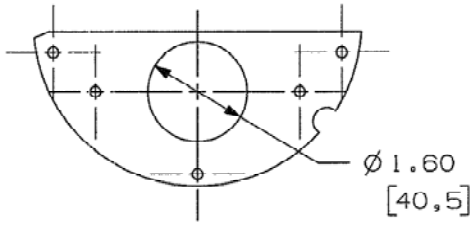

CATALOG NUMBER S1R6SPG

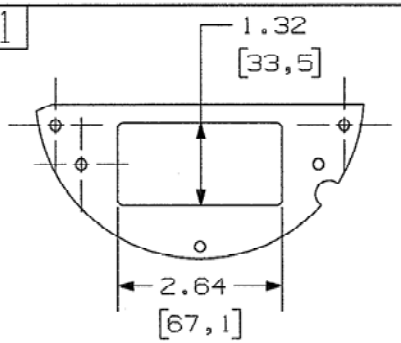

CATALOG NUMBER S1R6SPK

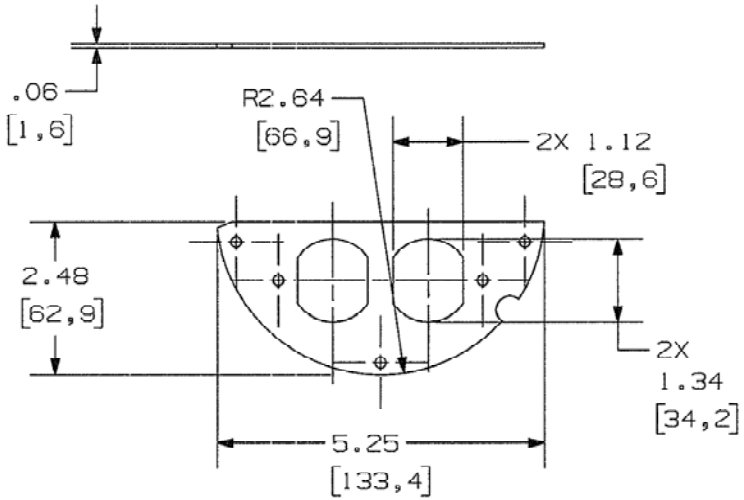

CATALOG NUMBER S1R6SPI

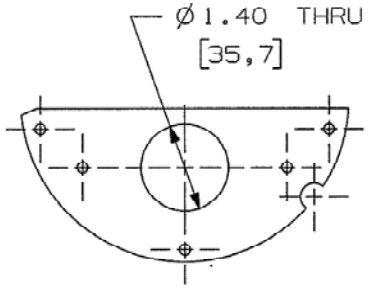

CATALOG NUMBER S1R6SPJ

NOTES:
1) ALL PLATES HAVE THE SAME OVERALL OUTSIDE DIMENSIONS AND THICKNESS. SEE S1R6SPI. MATERIAL ZINC PLATED STEEL.
2) ALL PLATES SHIPPED WITH MOUNTING SCREWS, NOT SHOWN. 6-32 X 1/4 ZINC PLATED.
3) ALL DIMENSIONS ARE IN INCHES AND [MILLIMETERS]

CODE 74545

LIST OF PARTS

DESCRIPTION	MATERIAL	FINISH
COVER PLATE	STEEL	WHITE
SCREWS	STEEL	WHITE

SYM	REVISIONS	APP	DATE
1	RELEASED PER DCN18435		1/3/12

THE DESIGN AND DIMENSIONS OF THE PRODUCT SHOWN ON THIS DRAWING ARE SUBJECT TO CHANGE WITHOUT NOTICE

TITLE COVER PLATE, RIGHT, 50%, 6 IN. FRPT

TOLERANCES UNLESS OTHERWISE SPECIFIED
FRACTIONS ±1/64
DECIMALS ±.005
ANGLES ±2°

WIRING DEVICE-KELLEMS
HUBBELL INCORPORATED
BRIDGEPORT, CT

DR. BY SRE | APP. BY
TR. BY | SCALE 1:2
CHK'D BY | DATE 1/3/12

DIMENSION SHEET FOR CAT. NO.

REPAIRABLE ☐ NON-REPAIRABLE ☒

B

M-11917

1