M-12041 3

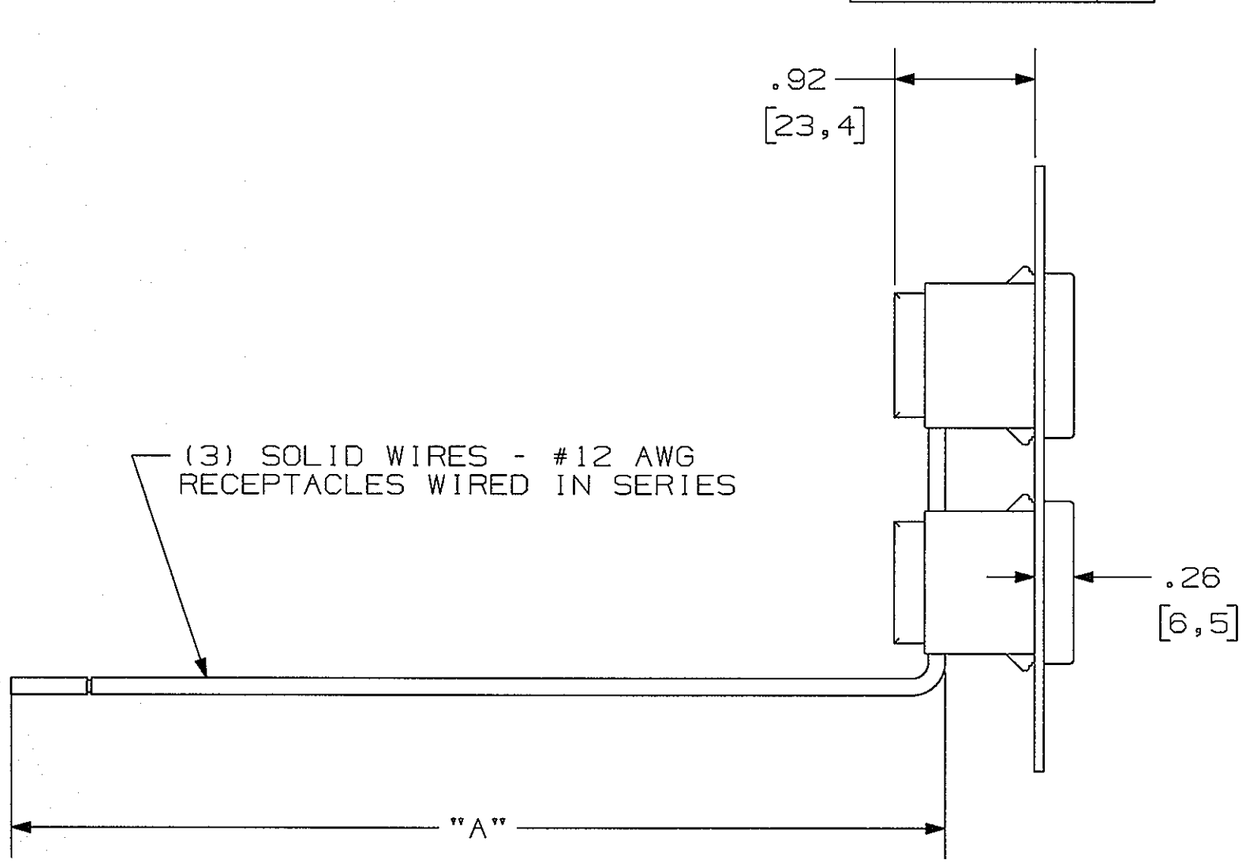

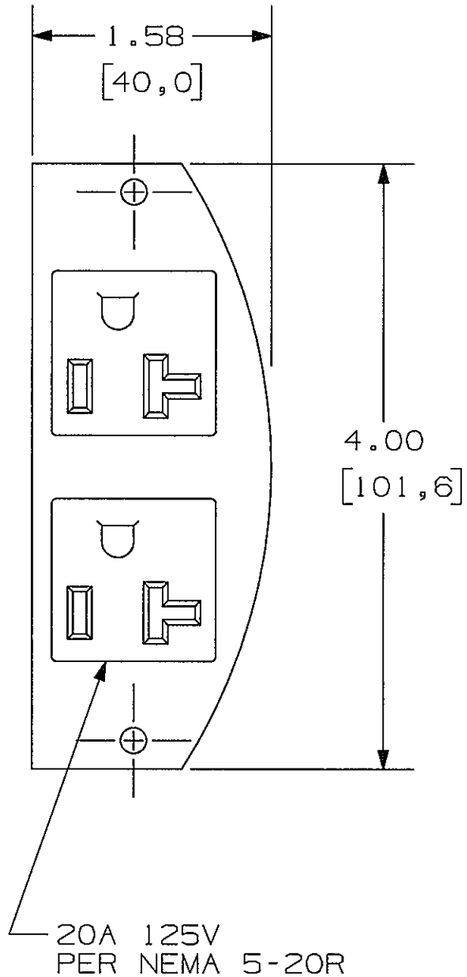

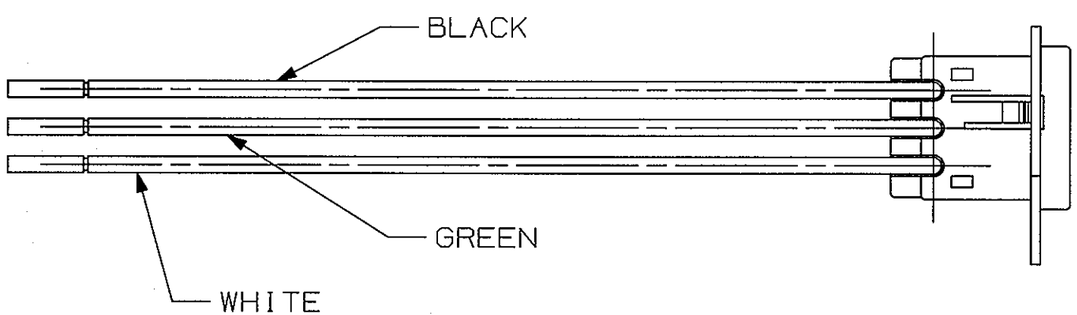

S1R8PSPZ SHOWN

CATALOG NO.	DIMENSION "A"	RECEPTACLE MARKING
S1R8PSPZ	18.0 IN [457,2]	
S1R8PSPZ25	25 FT, 762 CM	
S1R8PSPZC	18.0 IN [457,2]	CONTROLLED

NOTES:

1) ALL DIMENSIONS ARE IN INCHES AND [MILLIMETERS]

CODE 74545

LIST OF PARTS

DESCRIPTION	MATERIAL	FINISH
COVER PLATE	STEEL	WHITE
RECEPTACLE	----	BLACK
SOLID WIRE	COPPER	SEE DWG.
MOUNTING SCREWS	STEEL	WHITE

SYM	REVISIONS	APP	DATE
3	ADDED "RECEPT. MARKING COLUMN AND CAT #S1R8PSPZC TO TABLE. ADDED BASE CATALOG NUMBER SHOWN PER DCN21884. MYA	DJP	3/16/16
2	DIM "A" WAS 18.0 [457,2]. ADDED TABLE, IN DIM SHEET ADDED "SEE CHART" PER DCN 19304. MYA	DJP	1/29/13
1	RELEASED PER DCN18435		1/3/12

THE DESIGN AND DIMENSIONS OF THE PRODUCT SHOWN ON THIS DRAWING ARE SUBJECT TO CHANGE WITHOUT NOTICE

TITLE
PERIMETER POWER PLATE
8 INCH FRPT

TOLERANCES UNLESS OTHERWISE SPECIFIED
.XX = ±.01
.XXX = ±.005
ANGLES = ±2°

WIRING DEVICE-KELLEMS
HUBBELL INCORPORATED
SHELTON, CT

DR. BY SRE | APP. BY
TR. BY | SCALE 1:1
CHK. BY | DATE 1/3/12

DIMENSION SHEET FOR CAT. NO. SEE CHART

REPAIRABLE ☐ NON-REPAIRABLE ☒

B

M-12041

3