M-9526 | 4

RECEPTACLE PRE-WIRED WITH (3) #12 AWG WIRES 24" LONG.

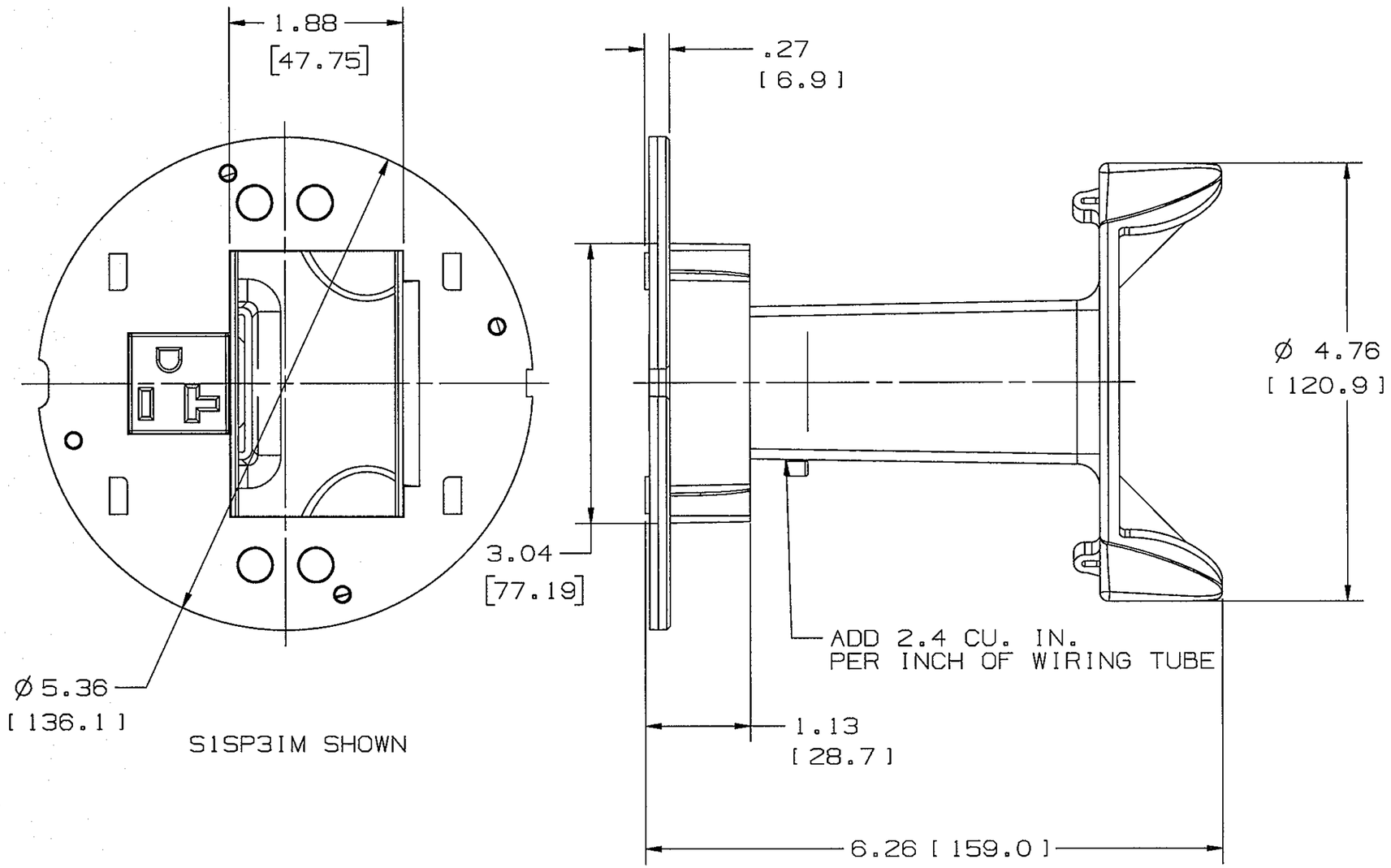

S1SP3IM SHOWN

CATALOG NO.	RECEPTACLE MARKING
S1SP3IM	-
S1SP3IMC	CONTROLLED

DIMENSIONS IN INCHES [MM]

LIST OF PARTS

DESCRIPTION	MATERIAL	FINISH
3U INFINI SUB PLT.	CAST ALUM.	BLACK
WIRING ENCLOSURE.AC	THERMOPLASTIC	GRAY
RECEPTACLE 20A	THERMOPLASTIC	BLACK

SYM	REVISIONS	APP	DATE
4	ADDED TABLE FOR EXISTING AND NEW CATALOGS, ADDED BASE CATALOG PER DCN 21884. MYA	DJP	3/16/16
3	ADDED 3.04 & 1.88 DCN. 12312		4-20-05
2	ADDED RECEPTACLE PRE-WIRED NOTE, ADD 2.4 CU. IN. NOTE, REVISED TITLE BLOCK FOR SYSTEM ONE. PER DCN 12261 TLS.	TLS	3-8-05
1	DCN11999 INITIAL RELEASE	TLS	11-8-04

THE DESIGN AND DIMENSIONS OF THE PRODUCT SHOWN ON THIS DRAWING ARE SUBJECT TO CHANGE WITHOUT NOTICE

TITLE SYSTEM ONE 3U INFINI SUB PLATE 20A 125V NEMA 5-20R

TOLERANCES UNLESS OTHERWISE SPECIFIED
FRACTIONS ±1/64
DECIMALS ±.005
ANGLES ±2°

WIRING DEVICE-KELLEMS
HUBBELL INCORPORATED
BRIDGEPORT, CT

DR. BY PAC | APP. BY TLS
TR. BY | SCALE NONE
CHK'D BY TLS | DATE 9-21-04

DIMENSION SHEET FOR CAT. NO. SEE TABLE

REPAIRABLE ☐ NON-REPAIRABLE ☐

B

M-9526

4

CODE 74545