M-9542 | 3

RECEPTACLE PRE-WIRED
WITH (3) #12 AWG 24"
LONG WIRES

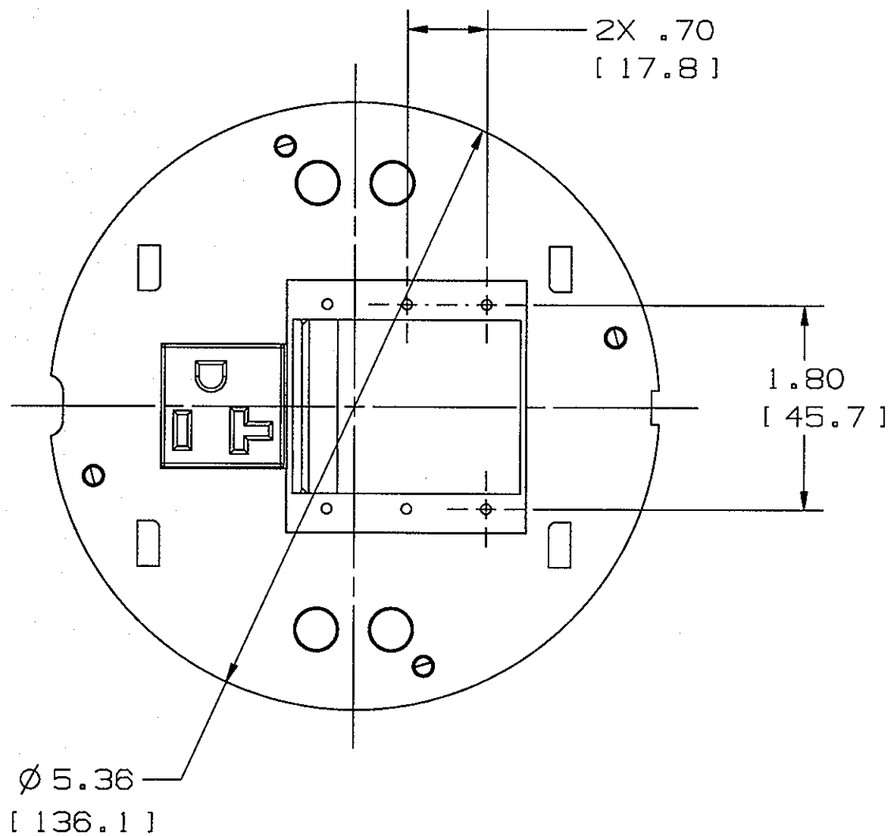

S1SPEXTI SHOWN

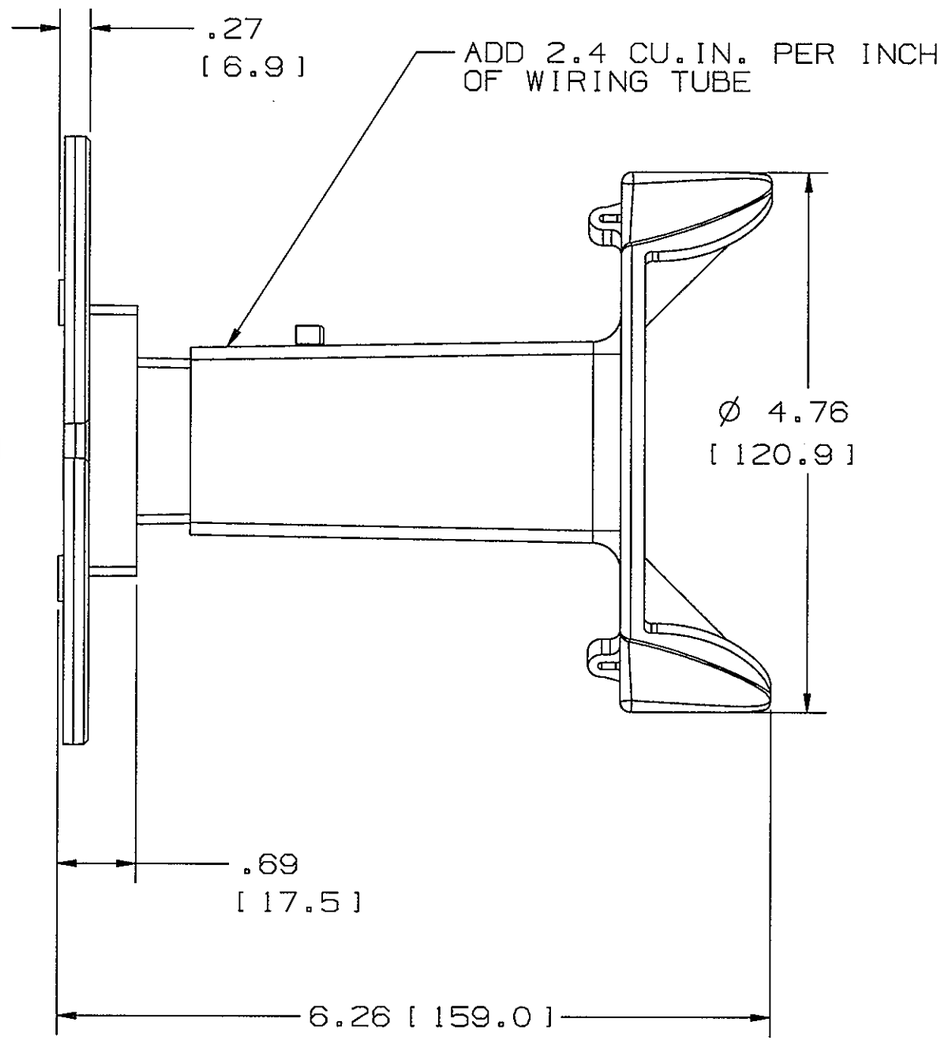

CATALOG NO.	RECEPTACLE MARKING
S1SPEXT1	-
S1SPEXT1C	CONTROLLED

DIMENSIONS IN INCHES [MM]

CODE 74545

LIST OF PARTS

DESCRIPTION	MATERIAL	FINISH
EXT 3M/AC SUB PLT.	CAST ALUM.	BLACK
WIRING ENCLOSURE.AC	THERMOPLASTIC	GRAY

SYM	REVISIONS	APP	DATE
3	ADDED TABLE, ADDED BASE CAT NO. SHOWN PER DCN 21884. MYA	DJP	3/17/16
2	ADDED 2X .70 [17.8], 1.80 [45.7], ADD 2.4 CU. IN. NOTE, RECEP PRE-WIRED NOTE & REVISED TITLE BLOCK PER DCN 12261 TLS	TLS	3-9-05
1	DCN11999 INITIAL RELEASE	TLS	11-8-04

THE DESIGN AND DIMENSIONS OF THE PRODUCT SHOWN ON THIS DRAWING ARE SUBJECT TO CHANGE WITHOUT NOTICE

TITLE SYSTEM ONE
EXTRON & AC 20A
125V MODULE

TOLERANCES UNLESS OTHERWISE SPECIFIED
FRACTIONS ±1/64
DECIMALS ±.005
ANGLES ±2°

WIRING DEVICE-KELLEMS
HUBBELL INCORPORATED
BRIDGEPORT, CT

DR. BY PAC	APP. BY TLS
TR. BY	SCALE NONE
CHK'D BY TLS	DATE 9-21-04

DIMENSION SHEET FOR CAT. NO. SEE TABLE

REPAIRABLE ☐ NON-REPAIRABLE ☐

B

M-9542

3