M-9544 | 3

RECEPTACLE PRE-WIRED WITH (3)#12 AWG 24" LONG WIRES.

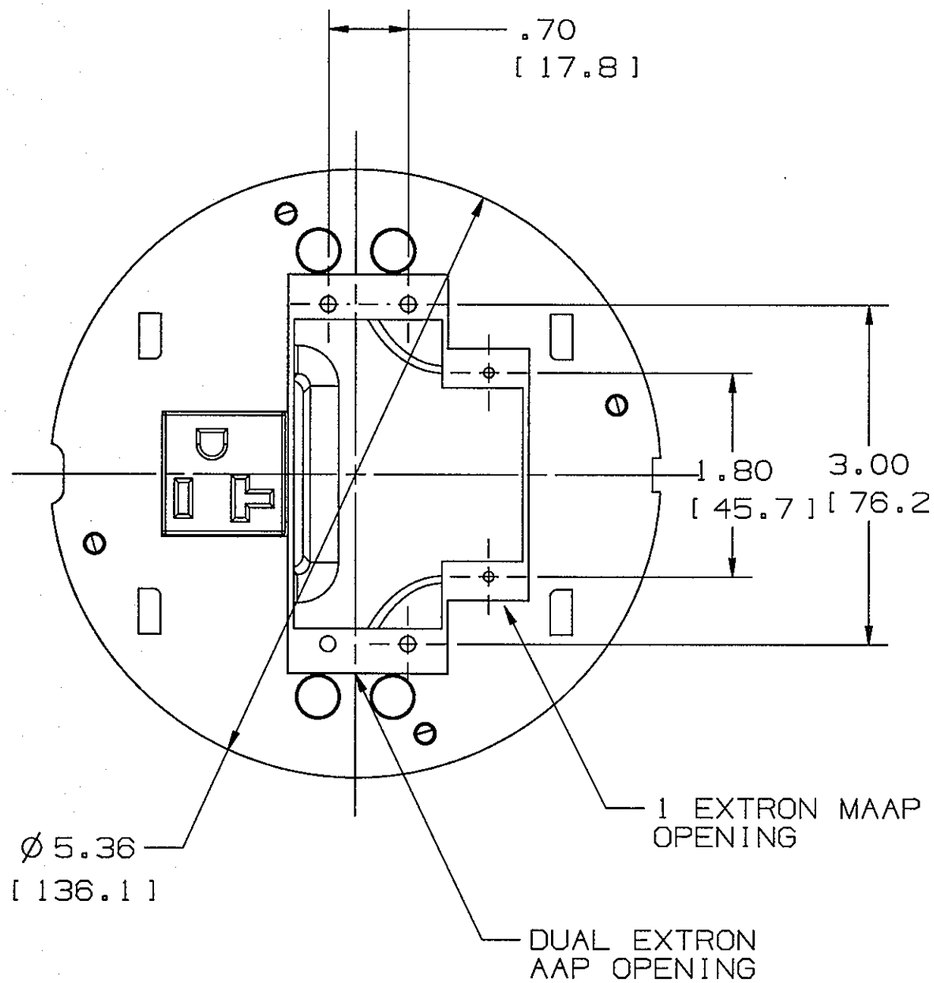


S1SPEXT2 SHOWN

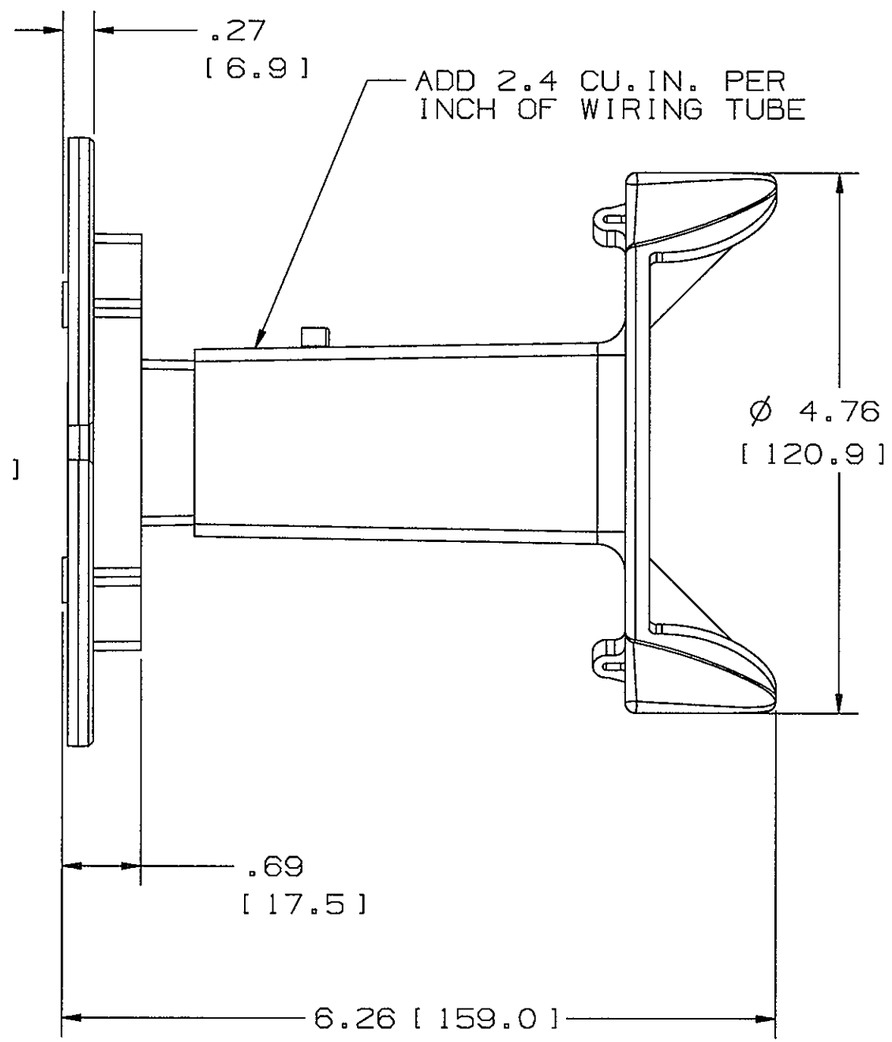


| CATALOG NO. | RECEPTACLE MARKING |
|---|---|
| S1SPEXT2 | - |
| S1SPEXT2C | CONTROLLED |

DIMENSIONS IN INCHES [MM]

CODE 74545

LIST OF PARTS

| DESCRIPTION | MATERIAL | FINISH |
|---|---|---|
| EXT 2A/1M/AC SUB PLT. | CAST ALUM. | BLACK |
| WIRING ENCLOSURE.AC | THERMOPLASTIC | GRAY |

| SYM | REVISIONS | APP | DATE |
|---|---|---|---|
| 3 | ADDED TABLE, ADDED BASE CAT NO. SHOWN PER DCN 21884. MYA | DJP | 3/17/16 |
| 2 | ADDED .70 [17.8], 3.00 [76.2], 1.80 [45.7], ADD 2.4 CU. IN. PER INCH NOTE, RECEPTACLE PRE-WIRED NOTE, EXTRON OPENING NOTES & REVISED TITLE BLOCK FOR SYSTEM ONE PER DCN 12261 TLS | TLS | 3-9-05 |
| 1 | DCN11999 INITIAL RELEASE | TLS | 11-8-04 |

THE DESIGN AND DIMENSIONS OF THE PRODUCT SHOWN ON THIS DRAWING ARE SUBJECT TO CHANGE WITHOUT NOTICE

TITLE
SYSTEM ONE (EXTRON)
2A/1M/AC SUB PLATE

TOLERANCES UNLESS OTHERWISE SPECIFIED
FRACTIONS ±1/64
DECIMALS ±.005
ANGLES ±2°

WIRING DEVICE-KELLEMS
HUBBELL INCORPORATED
BRIDGEPORT, CT

| | |
|---|---|
| DR. BY PAC | APP. BY TLS |
| TR. BY | SCALE NONE |
| CHK'D BY TLS | DATE 9-21-04 |

DIMENSION SHEET FOR CAT. NO. SEE TABLE

REPAIRABLE ☐ NON-REPAIRABLE ☐

B

M-9544

3