M-7511 | 3

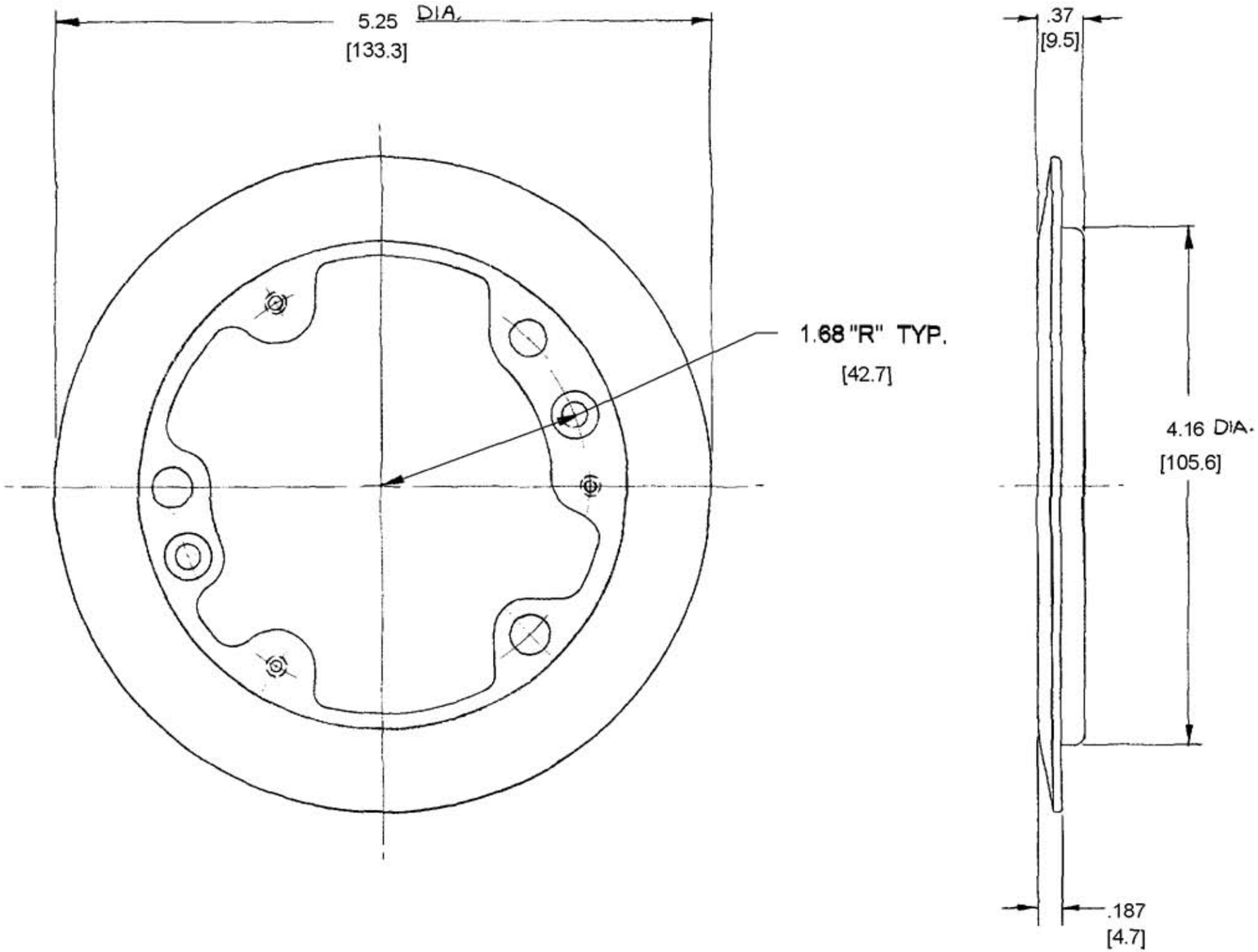

CAT Nº	MATERIAL
S 3182	BRASS
SA 3182	ALUMINUM

NOTE: INCHES
[mm]

TITLE

ROUND FLOORBOX CARPET FLANGE

LIST OF PARTS

DESCRIPTION	MATERIAL	FINISH
FLANGE	SEE TABLE	BRUSHED

SYM	REVISIONS	APP	DATE
3	CONVERT ALL DIMS TO MILLI METERS. ADDED DIM 1.68 PER DCN 8596 SPN	TCM	9/27/01
2	CHANGED FLANGE FINISH FROM SATIN TO BRUSHED AJL	[illegible]	7-31-90
1	CAT.Nº SA-3182 WAS SA-3181	[illegible]	KF 8-27-75

TOLERANCES UNLESS OTHERWISE SPECIFIED
FRACTIONS ± 1/64
DECIMALS ± .005
ANGLES ± 2°

HARVEY HUBBELL, INC.
BRIDGEPORT, CONN.

DR. BY KF | APP. BY JNC
TR. BY | SCALE F.U. Inlm.
CHK'D. BY SGL | DATE 12-19-72

DIMENSION SHEET FOR CAT. NO. SEE TABLE

REPAIRABLE ☐ NON-REPAIRABLE ☒

B

M-7511

3

CODE 74545