M-12921 | 1

CATALOG NUMBER	BODY COLOR	GOTCHA RING COLOR CODE	NPT HUB SIZE	CORD DIA. RANGE	*A ACROSS CORNERS	*A ACROSS FLATS	(B) 4	C	ØD (THROAT DIA.)	*E ACROSS CORNERS	*E ACROSS FLATS
SHC1003SS	STAINLESS STEEL	RED	1/4"	.19–.25 [4.7–6.3]	1.01 [25.7]	.88 [22.4]	.90 [22.9]	.46 [11.7]	.38 [9.7]	.87 [22.1]	.75 [19.0]
SHC1004SS	STAINLESS STEEL	BLACK	1/4"	.25–.31 [6.3–7.9]	1.01 [25.7]	.88 [22.4]	.90 [22.9]	.46 [11.7]	.38 [9.7]	.87 [22.1]	.75 [19.0]
SHC1009SS	STAINLESS STEEL	RED	3/8"	.19–.25 [4.7–6.3]	1.01 [25.7]	.88 [22.4]	.90 [22.9]	.46 [11.7]	.45 [11.4]	.87 [22.1]	.75 [19.0]
SHC1011SS	STAINLESS STEEL	WHITE	3/8"	.31–.38 [7.9–9.5]	1.01 [25.7]	.88 [22.4]	.90 [22.9]	.46 [11.7]	.45 [11.4]	.87 [22.1]	.75 [19.0]
SHC1012SS	STAINLESS STEEL	BLUE	3/8"	.38–.44 [9.5–11.0]	1.01 [25.7]	.88 [22.4]	.90 [22.9]	.46 [11.7]	.45 [11.4]	.87 [22.1]	.75 [19.0]

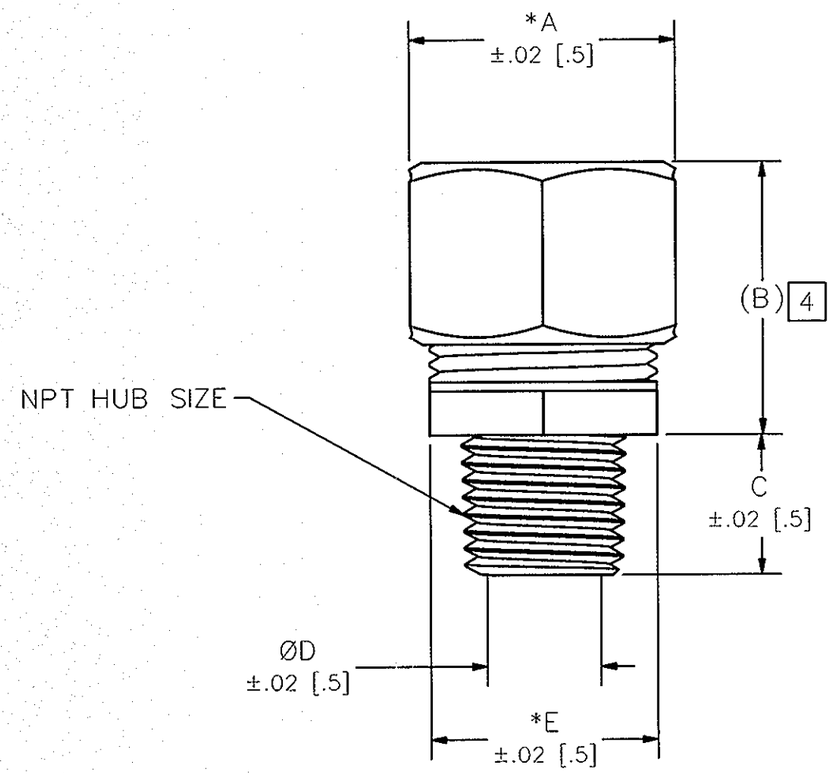

NOTES:

1. DIMENSIONS ARE IN INCHES [MM].
2. LOCKNUT PURCHASED SEPARATELY.
3. BUSHING COATED WITH AMBER PETROLEUM JELLY.

4 REFERENCE ONLY, DIMENSION MAY VARY.

LIST OF PARTS

DESCRIPTION	MATERIAL	FINISH
CORD CONN. BODY, MAKE	SST	
NUT	SST	
GOTCHA RING	NYLON	SEE TABLE
BUSHING	BLACK NEOPRENE	SEE NOTE 3

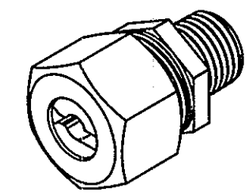

CATALOG NO. SHC1003SS
(NOT SHOWN TO SCALE)

REV	DESCRIPTION	APP	DATE
1	INITIAL RELEASE PER DCN 21189	DDL PJB	05/06/15

THE DESIGN AND DIMENSIONS OF THE PRODUCT SHOWN ON THIS DRAWING ARE SUBJECT TO CHANGE WITHOUT NOTICE

TITLE
STRAIGHT STAINLESS STEEL CORD CONNECTOR FORM 1

TOLERANCES UNLESS OTHERWISE SPECIFIED
.XX = ± .01
.XXX = ± .005
ANGLES = ± 2°

WIRING DEVICE-KELLEMS
HUBBELL INCORPORATED
SHELTON, CT

DR. BY	SR	APP. BY	
TR. BY		SCALE	2:1
CHK. BY	DDL	DATE	05/06/15

DIMENSION SHEET FOR CAT. NO. SEE TABLE

REPAIRABLE ☐ NON-REPAIRABLE ☐

B

M-12921

1

CODE 74545