M-12918 | 1

CATALOG NUMBER	BODY COLOR	NPT HUB SIZE	CORD DIA. RANGE	Ø A (OVERALL)	(B) [4]	C	Ø D (THROAT DIA.)	*E ACROSS CORNERS	*E ACROSS FLATS
SHC1061	ALUMINUM	1 1/2"	1.38–1.50 [34.9–38.1]	3.00 [76.2]	2.20 [55.9]	.75 [19.0]	1.53 [38.7]	2.97 [75.4]	2.75 [69.9]
SHC1062	ALUMINUM	1 1/2"	1.50–1.63 [38.1–41.3]	3.00 [76.2]	2.20 [55.9]	.75 [19.0]	1.53 [38.7]	2.97 [75.4]	2.75 [69.9]
SHC1063	ALUMINUM	1 1/2"	1.63–1.75 [41.3–44.4]	3.00 [76.2]	2.20 [55.9]	.75 [19.0]	1.53 [38.7]	2.97 [75.4]	2.75 [69.9]
SHC1064	ALUMINUM	1 1/2"	1.75–1.88 [44.4–47.6]	3.00 [76.2]	2.20 [55.9]	.75 [19.0]	1.53 [38.7]	2.97 [75.4]	2.75 [69.9]
SHC1065	ALUMINUM	2"	1.25–1.38 [31.7–34.9]	3.00 [76.2]	2.20 [55.9]	.79 [20.1]	1.94 [49.3]	3.24 [82.4]	3.00 [76.2]
SHC1066	ALUMINUM	2"	1.38–1.50 [34.9–38.1]	3.00 [76.2]	2.20 [55.9]	.79 [20.1]	1.94 [49.3]	3.24 [82.4]	3.00 [76.2]
SHC1067	ALUMINUM	2"	1.50–1.63 [38.1–41.3]	3.00 [76.2]	2.20 [55.9]	.79 [20.1]	1.94 [49.3]	3.24 [82.4]	3.00 [76.2]
SHC1068	ALUMINUM	2"	1.63–1.75 [41.3–44.4]	3.00 [76.2]	2.20 [55.9]	.79 [20.1]	1.94 [49.3]	3.24 [82.4]	3.00 [76.2]
SHC1069	ALUMINUM	2"	1.75–1.88 [44.4–47.6]	3.00 [76.2]	2.20 [55.9]	.79 [20.1]	1.94 [49.3]	3.24 [82.4]	3.00 [76.2]

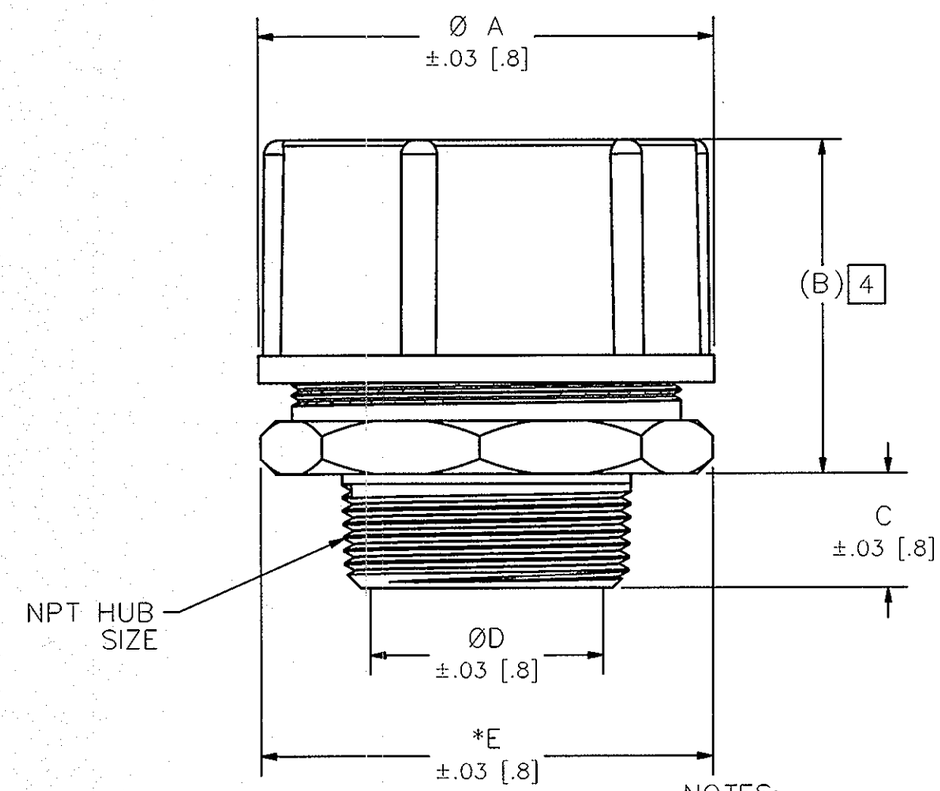

NOTES:

1. DIMENSIONS ARE IN INCHES [MM].
2. LOCKNUT PURCHASED SEPARATELY.
3. BUSHING COATED WITH AMBER PETROLEUM JELLY.

[4] REFERENCE ONLY, DIMENSION MAY VARY.

LIST OF PARTS

DESCRIPTION	MATERIAL	FINISH
CORD CONNECTOR BODY STR. MALE	ALUMINUM	
BUSHING	BLACK NEOPRENE	SEE NOTE 3
WASHER	COLD ROLLED STEEL	ZINC PLATED
NUT	ALUMINUM	

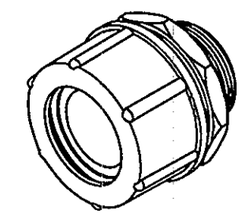

CATALOG NO. SHC1061
(NOT SHOWN TO SCALE)

REV	DESCRIPTION	APP	DATE
1	INITIAL RELEASE PER DCN 21189	DDL PJB	05/06/15

THE DESIGN AND DIMENSIONS OF THE PRODUCT SHOWN ON THIS DRAWING ARE SUBJECT TO CHANGE WITHOUT NOTICE

TITLE
STRAIGHT ALUMINUM CORD CONNECTOR FORM 6

TOLERANCES UNLESS OTHERWISE SPECIFIED
.XX = ± .01
.XXX = ± .005
ANGLES = ± 2°

WIRING DEVICE-KELLEMS
HUBBELL INCORPORATED
SHELTON, CT

DR. BY	SR	APP. BY	
TR. BY		SCALE	1:1
CHK. BY	DDL	DATE	05/06/15

DIMENSION SHEET FOR CAT. NO.
SEE TABLE

REPAIRABLE ☐
NON-REPAIRABLE ☐

B

M-12918

1

CODE 74545