M-13070 | 1

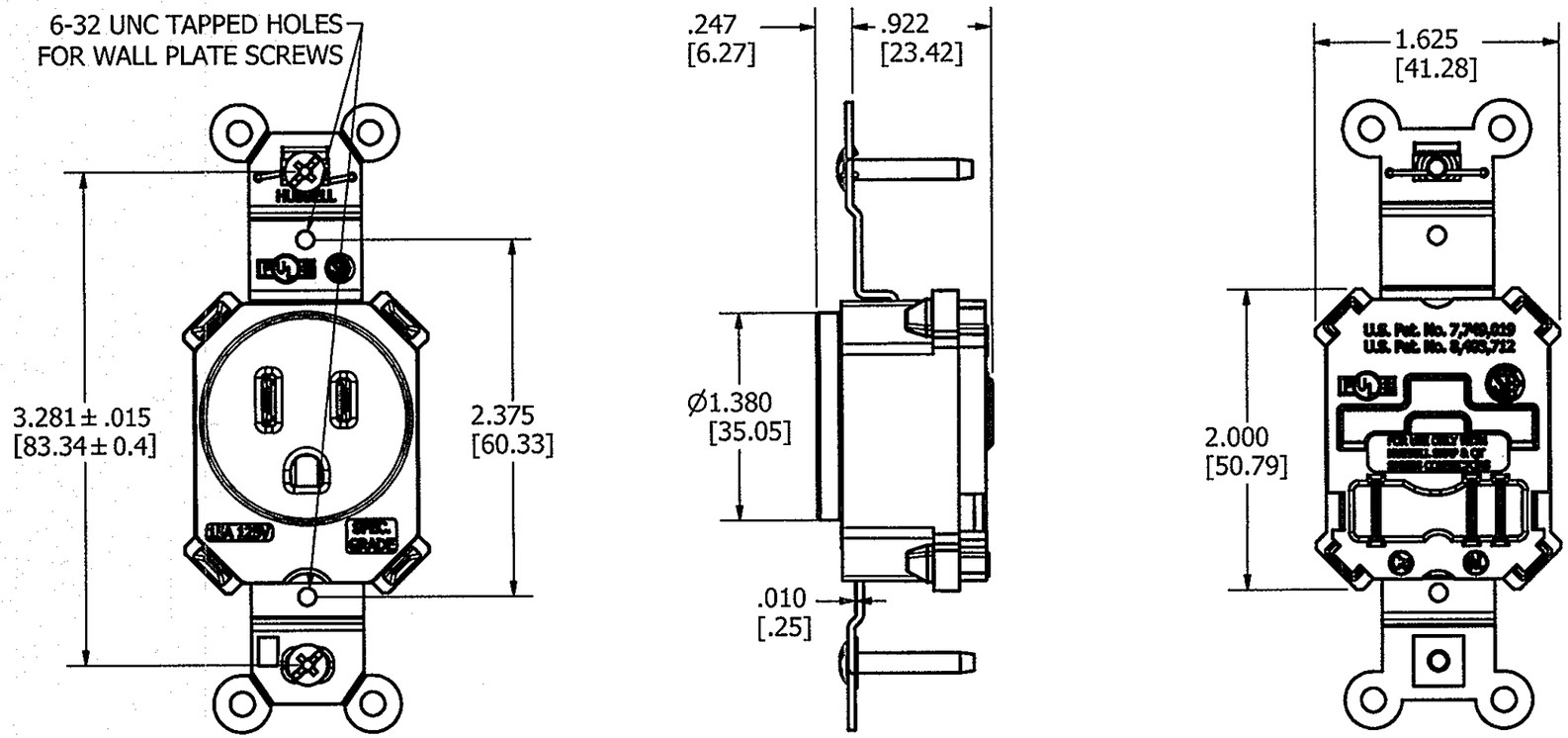


SHOWN 15A RECEPTACLE

| RATING | BROWN | IVORY | GRAY | WHITE | BLACK | ALMOND | LIGHT ALMOND | RED | BLUE |
|---|---|---|---|---|---|---|---|---|---|
| 15A | SNAP5261 | SNAP5261I | SNAP5261GY | SNAP5261W | SNAP5261BK | SNAP5261AL | SNAP5261LA | SNAP5261R | SNAP5261BL |
| 20A | SNAP5361 | SNAP5361I | SNAP5361GY | SNAP5361W | SNAP5361BK | SNAP5361AL | SNAP5361LA | SNAP5361R | SNAP5361BL |

NOTES:
1. DIMENSIONS ARE IN INCHES [MM].
2. ALL DEVICES UL LISTED AND CSA CERTIFIED.

CODE 74545

LIST OF PARTS

| DESCRIPTION | MATERIAL | FINISH |
|---|---|---|
| TOP | NYLON 6/6 | SPI A-3 |
| BASE | NYLON 6/6 | SPI A-3 |
| LINE CONTACTS | BRASS | |
| GROUND CONTACT | BRASS | |
| BRIDGE | .04 GALV STL | |
| STAPLE | S.S. | |
| WASHER | PVC FILM | BLACK |
| MOUNTING SCREWS | STEEL | ZINC PLT |

DIMENSION SHEET FOR CAT. NO. SEE TABLE

REPAIRABLE ☐ NON-REPAIRABLE ☐

| SYM | DESCRIPTION | APPRO | DATE |
|---|---|---|---|
| 1 | RELEASED PER DCN21263 EB | TLS | 07/06/2015 |

THE DESIGN AND DIMENSIONS OF THE PRODUCT SHOWN ON THIS DRAWING ARE SUBJECT TO CHANGE WITHOUT NOTICE

TITLE
SINGLE SNAP CONNECT RECEPTACLE, 15/20A 125V SPEC. GRADE, NON TR

TOLERANCES UNLESS OTHERWISE SPECIFIED
FRACTIONS ±1/64
DECIMALS ±.005
ANGLES ±2°

WIRING DEVICE-KELLEMS
HUBBELL INCORPORATED
SHELTON, CT

DR. BY ebazayev | APP. BY TLS
TR. BY | SCALE 1:1
CHK'D BY TLS | DATE 7/6/2015

B | M-13070 | 1