M-12379 | 1

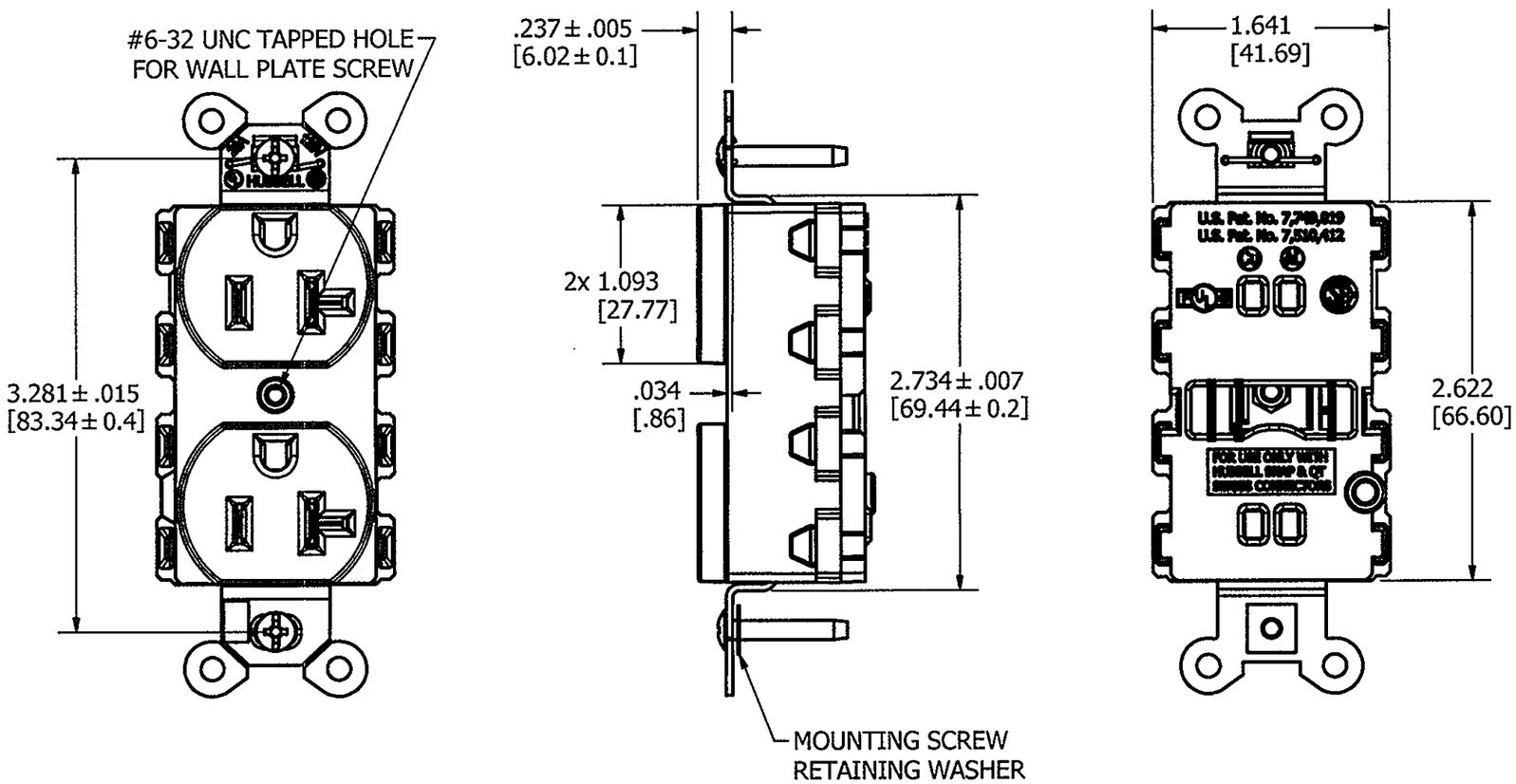

LIST OF PARTS		
DESCRIPTION	MATERIAL	FINISH
TOP	NYLON 6/6	SPI A-3
BASE	NYLON 6/6	SPI A-3
LINE CONTACTS	BRASS	
GROUND CONTACT	BRASS	
BRIDGE	.04 GALV STL	
STAPLE	S.S.	
WASHER	PVC FILM	BLACK
MOUNTING SCREWS	STEEL	ZINC PLT

SYM	DESCRIPTION	APPRO	DATE
1	RELEASED PER DCN19258 EB TLS	TLS	12/18/2012

RATING	BROWN	IVORY	GRAY	WHITE	BLACK	ALMOND	LIGHT ALMOND	OFFICE WHITE	ORANGE	RED	BLUE
15A	SNAP5262NA	SNAP5262INA	SNAP5262GYNA	SNAP5262WNA	SNAP5262BKNA	--	SNAP5262LANA	--	SNAP5262ORNA	SNAP5262RNA	SNAP5262BLNA
20A	SNAP5362NA	SNAP5362INA	SNAP5362GYNA	SNAP5362WNA	SNAP5362BKNA	--	SNAP5362LANA	--	SNAP5362ORNA	SNAP5362RNA	SNAP5362BLNA

NOTES:
1. DIMENSIONS ARE IN INCHES [MM].
2. ALL DEVICES UL LISTED AND CSA CERTIFIED.

THE DESIGN AND DIMENSIONS OF THE PRODUCT SHOWN ON THIS DRAWING ARE SUBJECT TO CHANGE WITHOUT NOTICE

TITLE
DUPLEX RECEPTACLE, 15/20A 125V
NON IG & TR & LED

TOLERANCES UNLESS OTHERWISE SPECIFIED
FRACTIONS ±1/64
DECIMALS ±.005
ANGLES ±2°

WIRING DEVICE-KELLEMS
HUBBELL INCORPORATED
SHELTON, CT

DR. BY ebazayev | APP. BY TLS
TR. BY | SCALE
CHK'D BY TLS | DATE 1/10/2013

DIMENSION SHEET FOR CAT. NO.
REPAIRABLE ☐ NON-REPAIRABLE ☐
B
M-12379
1

CODE 74545