M-12381 | 2

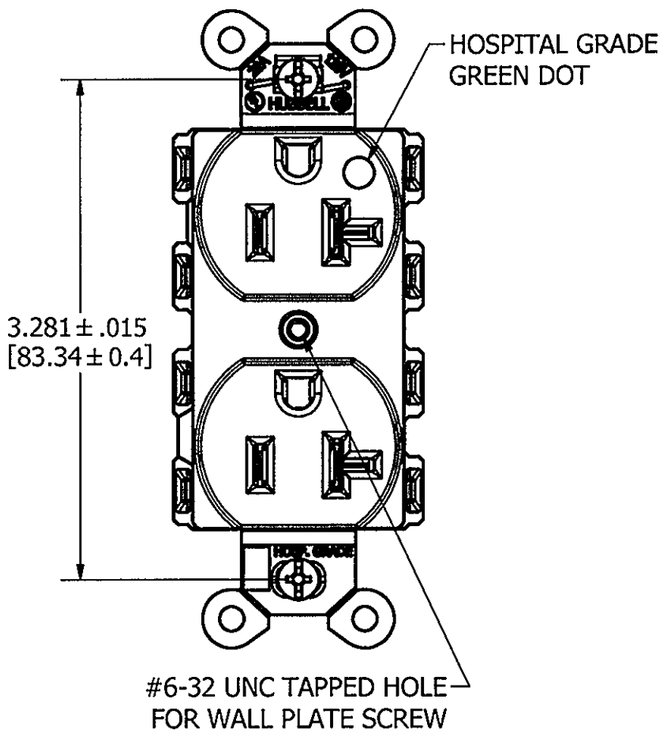


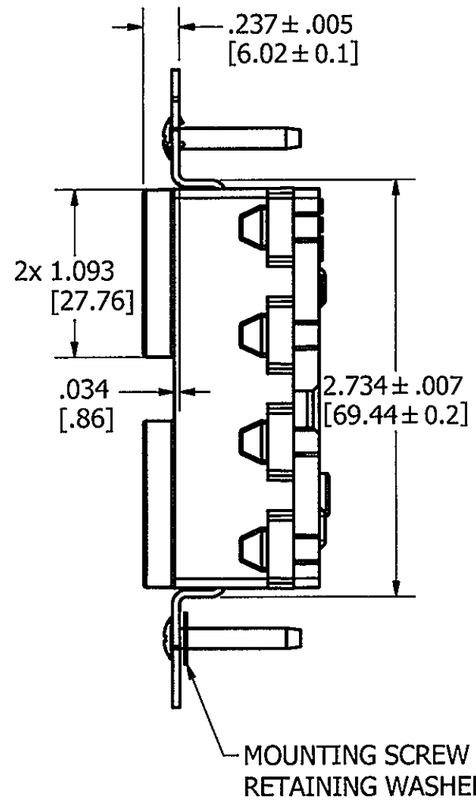


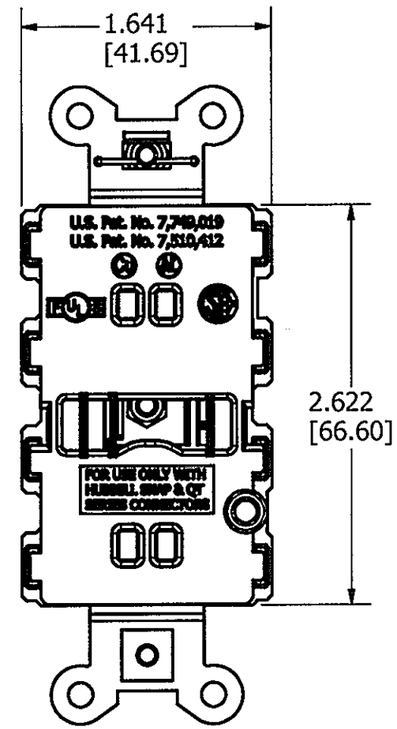


| RATING | BROWN | IVORY | GRAY | WHITE | BLACK | ALMOND | LIGHT ALMOND | OFFICE WHITE | ORANGE | RED | BLUE |
|---|---|---|---|---|---|---|---|---|---|---|---|
| 15A | SNAP8200NA | SNAP8200INA | SNAP8200GYNA | SNAP8200WNA | SNAP8200BKNA | -- | SNAP8200LANA | -- | -- | SNAP8200RNA | SNAP8200BLNA |
| 20A | SNAP8300NA | SNAP8300INA | SNAP8300GYNA | SNAP8300WNA | SNAP8300BKNA | -- | SNAP8300LANA | -- | -- | SNAP8300RNA | SNAP8300BLNA |

NOTES:
1. DIMENSIONS ARE IN INCHES [MM].
2. ALL DEVICES UL LISTED AND CSA CERTIFIED.

CODE 74545

LIST OF PARTS

| DESCRIPTION | MATERIAL | FINISH |
|---|---|---|
| TOP | NYLON 6/6 | SPI A-3 |
| BASE | NYLON 6/6 | SPI A-3 |
| LINE CONTACTS | BRASS | |
| GROUND CONTACT | BRASS | |
| BRIDGE | .04 GALV STL | |
| STAPLE | S.S. | |
| WASHER | PVC FILM | BLACK |
| MOUNTING SCREWS | STEEL | ZINC PLT |

| SYM | DESCRIPTION | APPRO | DATE |
|---|---|---|---|
| 2 | 01/17/2013 UPDATED FOR NEW LOCATION OF HG "DOT" PER DCN19283 EB | TLS TLS | |

THE DESIGN AND DIMENSIONS OF THE PRODUCT SHOWN ON THIS DRAWING ARE SUBJECT TO CHANGE WITHOUT NOTICE

TITLE
DUPLEX RECEPTACLE, 15/20A 125V
HOSPITAL GRADE,
NON IG & TR & LED

TOLERANCES UNLESS OTHERWISE SPECIFIED
FRACTIONS ±1/64
DECIMALS ±.005
ANGLES ±2°

WIRING DEVICE-KELLEMS
HUBBELL INCORPORATED
SHELTON, CT

DR. BY ebazayev | APP. BY TLS
TR. BY | SCALE
CHK'D BY TLS | DATE 1/10/2013

DIMENSION SHEET FOR CAT. NO.
REPAIRABLE ☐
NON-REPAIRABLE ☐
B
M-12381
2