M-8861 | 2

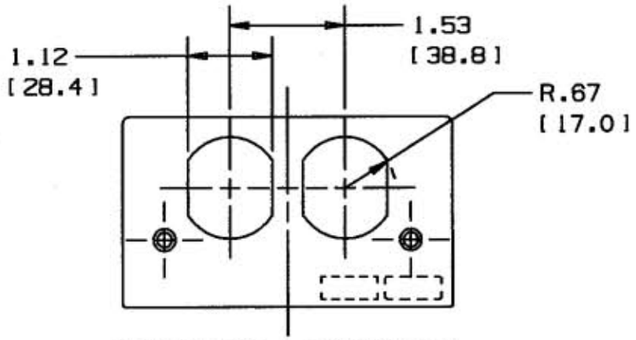

SS2309DGYA & SS2309DBKA
DUPLEX RECEPTACLE PLATE

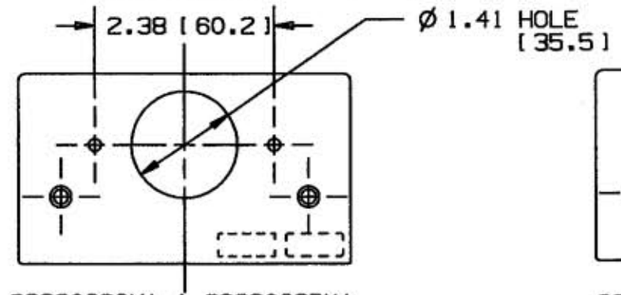

SS2309SGYA & SS2309SBKA
SINGLE RECEPTACLE PLATE

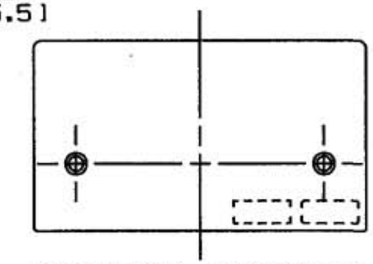

SS2309BGYA, SS2309BBKA
& SS2309BALA
BLANK PLATE

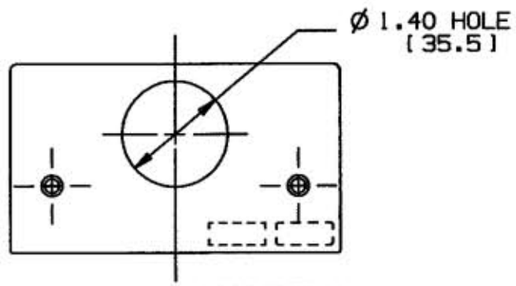

SS2309TGYA & SS2309TBKA
TELEPHONE PLATE

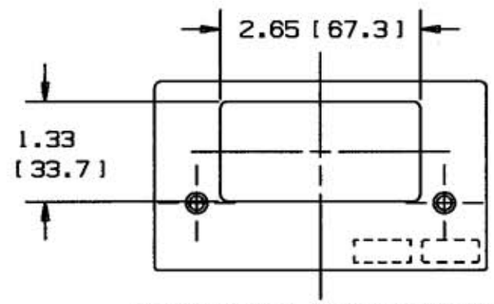

SS2309SLGYA & SS2309SLBKA
STYLE LINE DUPLEX
RECEPTACLE PLATE

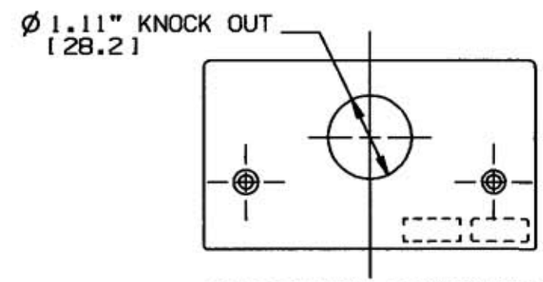

SS2309FGYA, SS2309FBKA
& SS2309FALA
3/4" CONDUIT PLATE

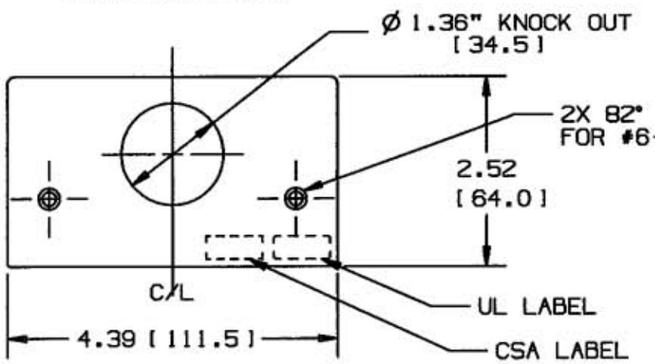

SS2309F1GYA & SS2309F1BKA
1" CONDUIT PLATE

	FACEPLATE	
CAT. NO.	MATERIAL	COLOR
SS2309DGYA	.06 [1.5] ALUM.	GRAY
SS2309DBKA	.06 [1.5] ALUM.	BLACK
SS2309SGYA	.06 [1.5] ALUM.	GRAY
SS2309SBKA	.06 [1.5] ALUM.	BLACK
SS2309BGYA	.06 [1.5] ALUM.	GRAY
SS2309BBKA	.06 [1.5] ALUM.	BLACK
SS2309TGYA	.06 [1.5] ALUM.	GRAY
SS2309BALA	.06 [1.5] ALUM.	SILVER

	FACEPLATE	
CAT. NO.	MATERIAL	COLOR
SS2309TBKA	.06 [1.5] ALUM.	BLACK
SS2309SLGYA	.06 [1.5] ALUM.	GRAY
SS2309SLBKA	.06 [1.5] ALUM.	BLACK
SS2309FGYA	.09 [2.3] ALUM.	GRAY
SS2309FBKA	.09 [2.3] ALUM.	BLACK
SS2309F1GYA	.09 [2.3] ALUM.	GRAY
SS2309F1BKA	.09 [2.3] ALUM.	BLACK
SS2309FALA	.09 [2.3] ALUM.	SILVER

LIST OF PARTS

DESCRIPTION	MATERIAL	FINISH

DIMENSION SHEET FOR CAT. NO. SEE CHART

REPAIRABLE ☐ NON-REPAIRABLE ☐

SYM	REVISIONS	APP	DATE
2	ADDED SS2309BALA & SS2309FALA TO TABLE PER DCN #13061 RCM	JPP	4/20/06
1	INITIAL RELEASE #9516	SM	6-18-02

THE DESIGN AND DIMENSIONS OF THE PRODUCT SHOWN ON THIS DRAWING ARE SUBJECT TO CHANGE WITHOUT NOTICE

TITLE CUSTOMER DRAWING FOR SS2309 SERIES

TOLERANCES UNLESS OTHERWISE SPECIFIED
FRACTIONS ±1/64
DECIMALS ±.005
ANGLES ±2°

WIRING DEVICE-KELLEMS
HUBBELL INCORPORATED
BRIDGEPORT, CT

DR. BY PAC | APP. BY
TR. BY | SCALE HALF
CHK'D BY SM | DATE 6-13-02

B

M-8861

2

CODE 74545