M-10351 3

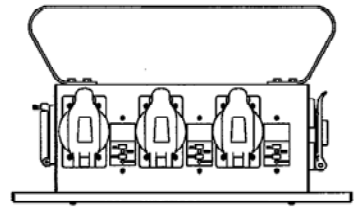

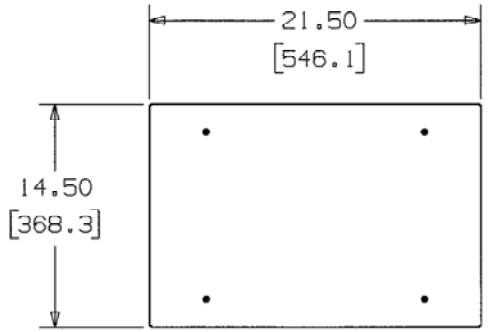

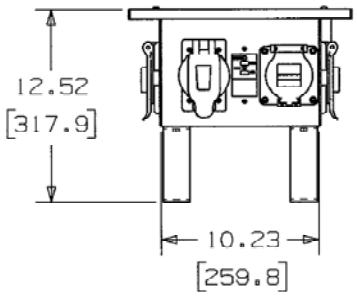

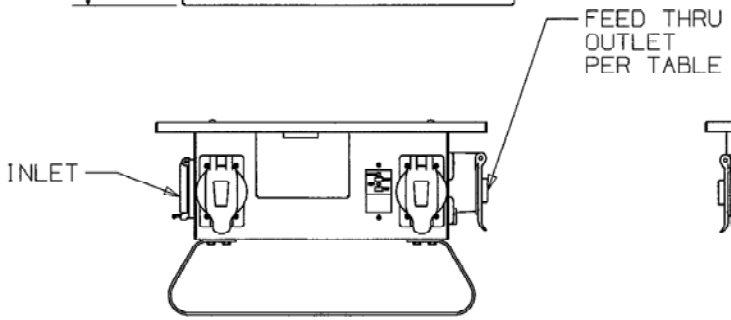

(CATALOG TPDL SHOWN)

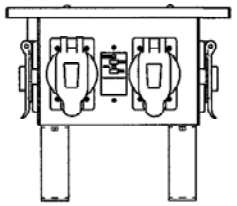

CAT. NO.	RATING	INLET	OUTLET	RECEPTACLES	GFCI	WEIGHT
TPDL	50A 125/250V	CS6375	CS6369	(1) L6-30R (6) L5-20R	NO YES	29 LBS
TPDS	50A 125/250V	CS6375	CS6369	(1) L6-30R (6) 5-20R	NO YES	28 LBS
TPDLBSC	30A 125/250V	HBL2715SW	-----	(1) 7410G (6) 7582G	NO YES	28 LBS
TPDS2	50A 125/250V	CS6375	CS6369	(6) 5-20R	YES	27 LBS

NOTES:
1. DIMS. TO BE IN INCHES
[mm]

CODE 74545

LIST OF PARTS

DESCRIPTION	MATERIAL	FINISH

SYM	REVISIONS	APP	DATE
3	ADDED CAT. TPDS2 TO TABLE; ADDED CALLOUT "(CATALOG TPDL SHOWN)" PER DCN 14739 RCM	JPP	3/27/08
2	ADDED CAT. TPDLBSC TO TABLE. REVISED CALLOUT FOR OUTLET. PER DCN 14374 SPN	JPP	11/5/07
1	RELEASED PER DCN 13493 RCM	SL	12/6/06

THE DESIGN AND DIMENSIONS OF THE PRODUCT SHOWN ON THIS DRAWING ARE SUBJECT TO CHANGE WITHOUT NOTICE

TITLE
TEMPORARY POWER DISTRIBUTION BOX

TOLERANCES UNLESS OTHERWISE SPECIFIED
FRACTIONS ±1/64
DECIMALS ±.005
ANGLES ±2°

WIRING DEVICE-KELLEMS
HUBBELL INCORPORATED
BRIDGEPORT, CT

DR. BY RCM | APP. BY SL
TR. BY | SCALE
CHK'D BY SL | DATE 12/6/06

DIMENSION SHEET FOR CAT. NO. SEE TABLE

REPAIRABLE ☒ NON-REPAIRABLE ☐

B

M-10351

3