M-8795 | 1

HUBBELL P/N	A	WEIGHT (OZ.)
UB12	M12x1	2.8
UB18	M18x1	2.5
UB30	M30x1.5	2.3

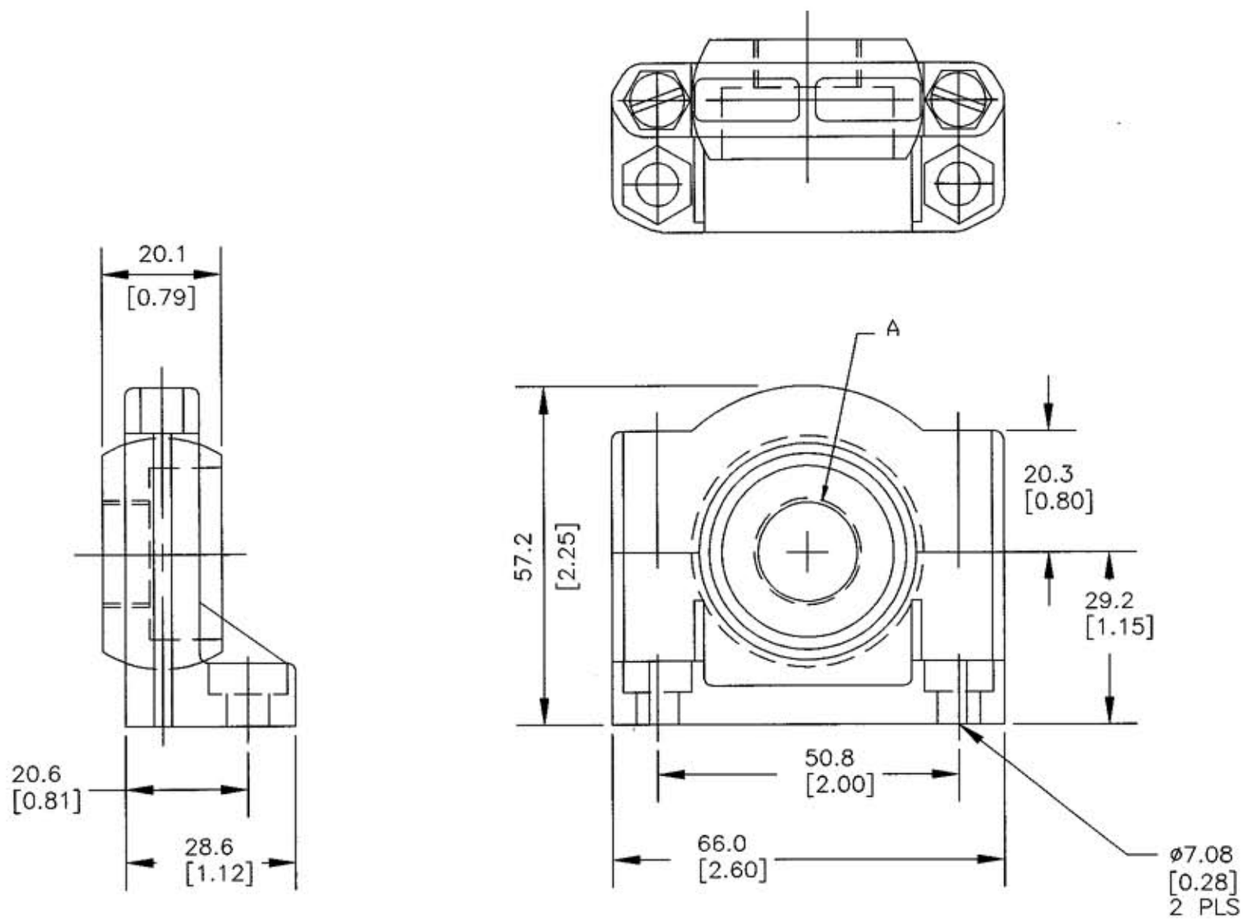

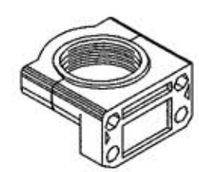

UNLESS OTHERWISE SPECIFIED DIMENSIONS ARE IN mm (INCHES)

CODE 74545

LIST OF PARTS

DESCRIPTION	MATERIAL	FINISH
BRAKET, SWIVEL	NYLON (GLASS FILLED)	

DIMENSION SHEET FOR CAT. NO. SEE CHART

REPAIRABLE ☐ NON-REPAIRABLE ☒

SYM	REVISIONS	APP	DATE
1	5/3/02 "X" REMOVED; LAST "X" REVISION WAS X-0. RELEASED FOR PRODUCTION PER DCN #9320. GDR MJL	MJL	5/23/02

THE DESIGN AND DIMENSIONS OF THE PRODUCT SHOWN ON THIS DRAWING ARE SUBJECT TO CHANGE WITHOUT NOTICE

TITLE

SWIVEL-STYLE UNIVERSAL BRACKETS

TOLERANCES UNLESS OTHERWISE SPECIFIED
FRACTIONS ±1/64
DECIMALS ±.005
ANGLES ±2°

WIRING DEVICE-KELLEMS
HUBBELL INCORPORATED
BRIDGEPORT, CT

DR. BY GDR	APP. BY MJL
TR. BY	SCALE NONE
CHK'D BY	DATE 5/3/02

M-8795

B

1