M-13281 | 1

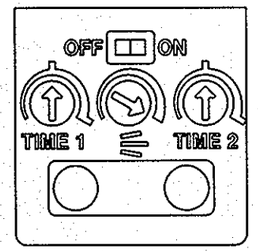


VIEW WITH COVER REMOVED

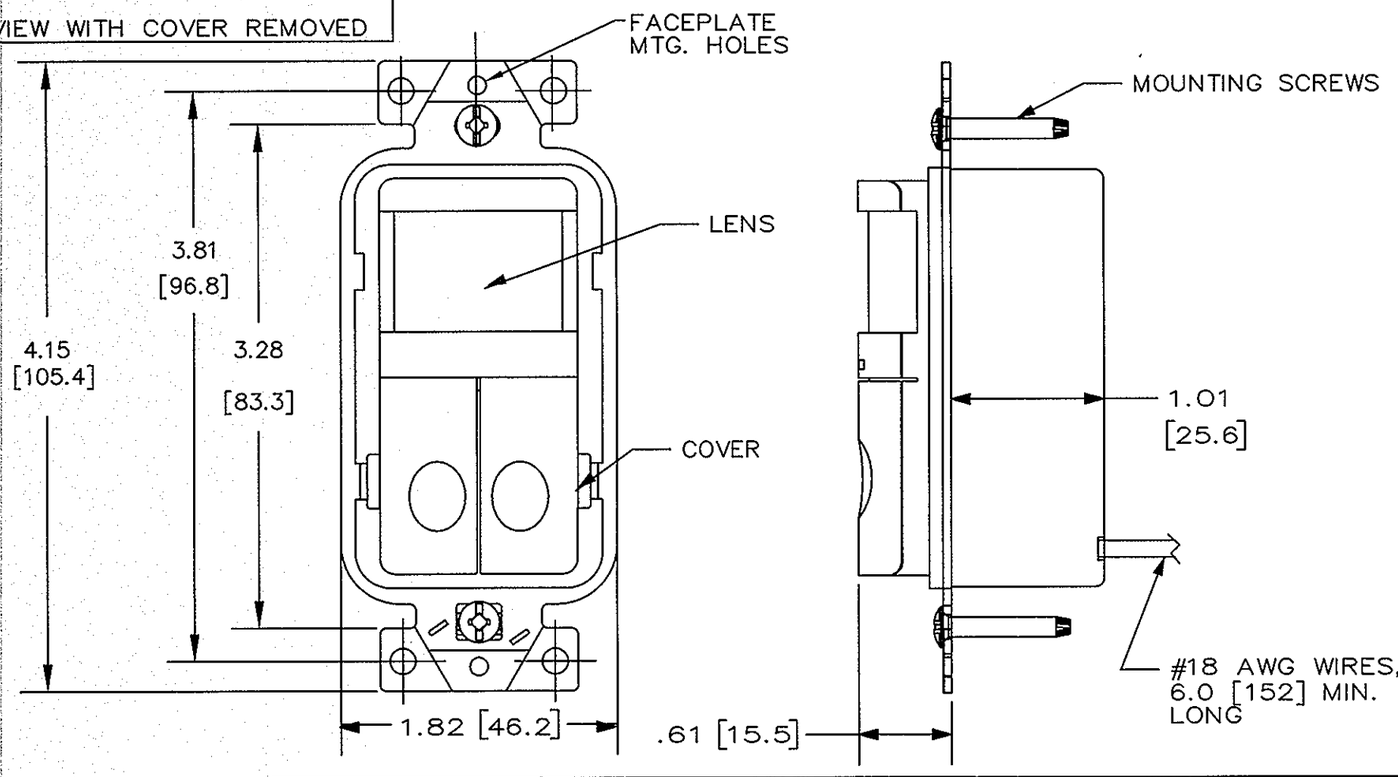


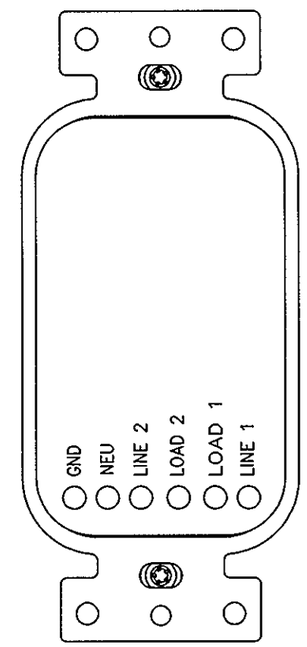


| Catalog Number | Night Light | Ground Wire Power | Neutral Wire Power | Vacancy Mode (Manual ON) | Occupancy Mode (Auto ON) |
|---|---|---|---|---|---|
| WS1020xx | | X | | | X |
| WS1021Nx | X | X | | | X |
| WS1021xx | | X | | X | |
| WS1021Nxx | X | X | | X | |
| WS1024xx | | | X | | X |
| WS1024Nxx | X | | X | | X |
| WS1025xx | | | X | X | |
| WS1025Nxx | X | | X | X | |

ALL DIMENSIONS ARE IN INCHES AND [mm]

LIST OF PARTS

| DESCRIPTION | MATERIAL | FINISH |
|---|---|---|
| HOUSING | THERMOPLASTIC | ----- |
| LENS | POLYETHYLENE | ----- |
| MOUNTING STRAP | STEEL | ZINC |
| MOUNTING SCREWS | STEEL | ZINC |

DIMENSION SHEET FOR CAT. NO. SEE CHART

REPAIRABLE ☐ NON-REPAIRABLE ☒

| SYM | REVISIONS | APP | DATE |
|---|---|---|---|
| 1 | NEW RELEASE PER DCN 21910 SPN | SL | 3/22/16 |

THE DESIGN AND DIMENSIONS OF THE PRODUCT SHOWN ON THIS DRAWING ARE SUBJECT TO CHANGE WITHOUT NOTICE

TITLE DUAL-CIRCUT WALL SWITCH PIR SENSOR

TOLERANCES UNLESS OTHERWISE SPECIFIED
.XX = ±.01
.XXX = ±.005
ANGLES = ±2°

WIRING DEVICE-KELLEMS
HUBBELL INCORPORATED
SHELTON, CT

DR. BY SPN | APP. BY SL
TR. BY | SCALE 1:1
CHK. BY SL | DATE 3/22/16

B | M-13281 | 1

CODE 74545