M-13998 | 1

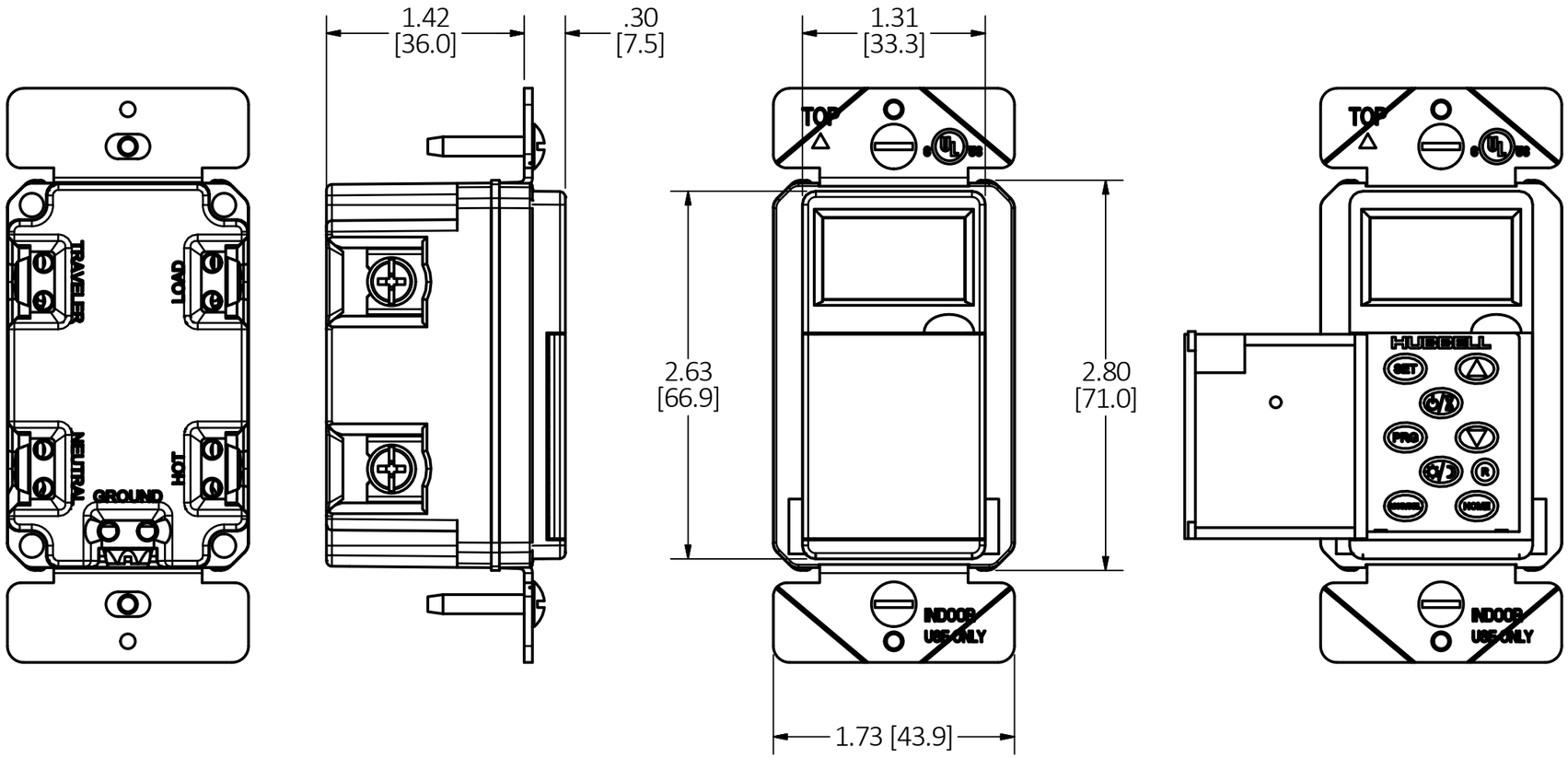

NOTES:

- OPERATING MODES: MANUAL, AUTOMATIC, RANDOM, COUNTDOWN
- AUTOMATIC DAYLIGHT SAVINGS IMPLMENTATION
- PROGRAMABLE WITH UP TO 7 INDEPENDENT ON/OFF CYCLES
- SINGLE POLE AND 3-WAY FUNCTIONALITY IN ONE UNIT
- SELF-CHARGING RECHARGEABLE BATTERY
- INTERCHANGEABLE FACE FRAME AND DOOR. SUPPLIED WITH WHITE, LIGHT ALMOND, AND GRAY FRAME/DOOR ASSEMBLIES
- NEUTRAL WIRE CONNECTION REQUIRED
- RATINGS:
  - VOLTAGE: 120 VAC, 60 HZ
  - RESISTIVE LOAD: 15 A
  - TUNGSTEN LOAD: 1200 W
  - STANDARD BALLAST LOAD: 1200 VA
  - ELECTRONIC BALLAST/LED LOAD: 5 A OR 600 W
  - MOTOR LOAD: 1/2 HP

CAGE CODE 74545

LIST OF PARTS

DESCRIPTION	MATERIAL	FINISH
BRIDGE	STEEL	GALVANIZED
BACK	THERMOPLASTIC	BROWN
FACE	THERMOPLASTIC	WHITE
FRAME/DOOR	THERMOPLASTIC	WHITE, LIGHT ALMOND, GRAY

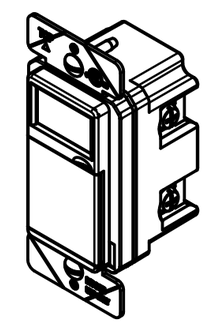

REV	DESCRIPTION	APP	DATE
1	ORIGINAL RELEASE	SBW	3/13/19

THE DESIGN AND DIMENSIONS OF THE PRODUCT SHOWN ON THIS DRAWING ARE SUBJECT TO CHANGE WITHOUT NOTICE. DIMENSIONS ARE IN INCHES [mm].

TITLE
WSTA120
ASTRONOMICAL TIMER SWITCH

WIRING DEVICE-KELLEMS
HUBBELL INCORPORATED
SHELTON, CT

TOLERANCES UNLESS OTHERWISE SPECIFIED
.XX = ± .01
.XXX= ± .005
ANGLE TOL. ±2°

DR. BY	SBW	SCALE	1 : 1
CHK. BY		DATE	10/25/2018

DIMENSION SHEET FOR CAT. NO.
WSTA120

B

M-13998

1