M-10171 | 1

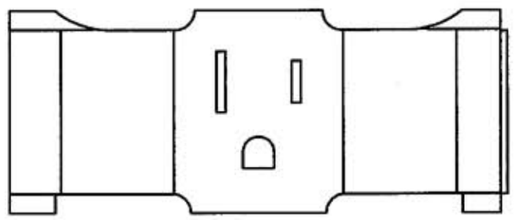

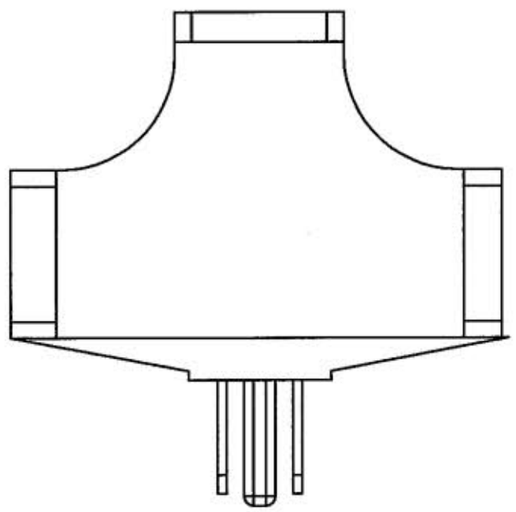

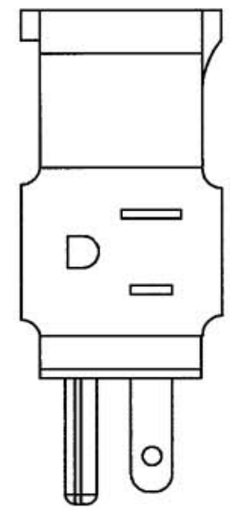

NOTES:

PRODUCT SPECIFICATIONS

15A 125VAC 2 POLE 3 WIRE
NEMA 5-15 BLADE AND OUTLET DIMENSIONS
HEAVY DUTY RUBBER
cUL LISTED

LIST OF PARTS

DESCRIPTION	MATERIAL	FINISH
HOUSING	RUBBER	ORANGE
BLADES	BRASS	

DIMENSION SHEET FOR CAT. NO. RT303

REPAIRABLE ☐ NON-REPAIRABLE ☒

SYM	REVISIONS	APP	DATE
1	08/21/06 RELEASED TO PRODUCTION PER DCN# 13353	RDK	08/21/06

THE DESIGN AND DIMENSIONS OF THE PRODUCT SHOWN ON THIS DRAWING ARE SUBJECT TO CHANGE WITHOUT NOTICE

TITLE HEAVY DUTY 15A 125VAC 2 POLE 3 WIRE GROUNDING SINGLE TO THREE OUTLET

TOLERANCES UNLESS OTHERWISE SPECIFIED
FRACTIONS ±1/64
DECIMALS ±.005
ANGLES ±2°

HUBBELL WIRING SYSTEMS
BRIDGEPORT, CT

DR. BY AMZ	APP. BY RDK
TR. BY	SCALE NONE
CHK'D BY RDK	DATE 06/07/06

B

M-10171

1

CODE 74545