M-10199 | 1

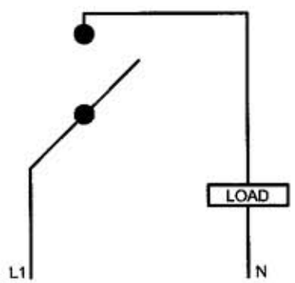

SPST
WIRING

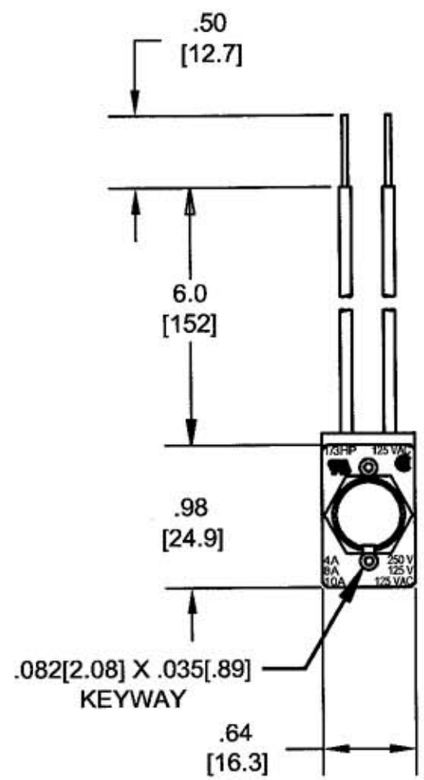

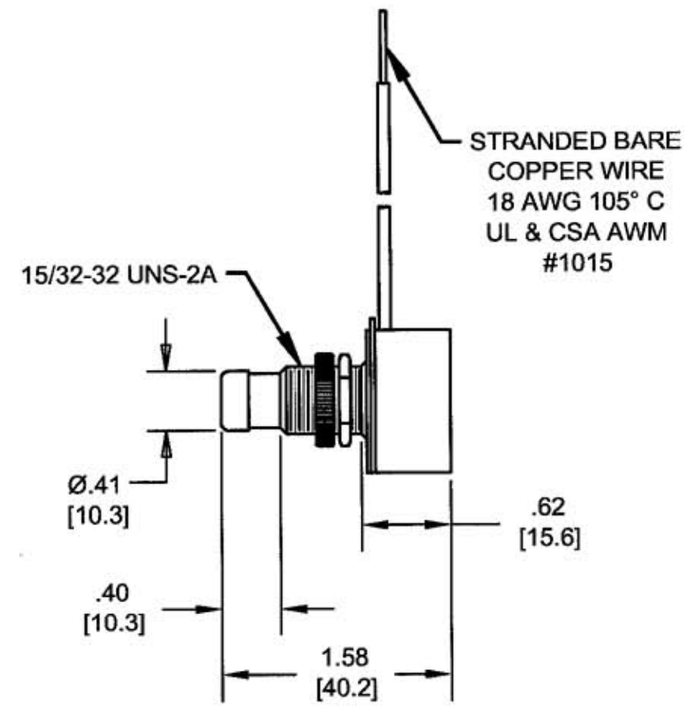

NOTES: (UNLESS OTHERWISE SPECIFIED):

1) DIMENSIONS ARE: INCHES
[MM]

2) SUPPLIED ASSEMBLED WITH: FACE PLATE, KNURL NUT AND HEX NUT.

3) RECOMMENDED PANEL MOUNT OPENING 0.50 [12.7].

4) RATING: 4 AMP, 250VAC
8 AMP, 125VAC
10 AMP, 125VAC
1/3 HP, 125VAC

CATALOG NO.	SWITCH DESCRIPTION
HBL11PBWL	SINGLE POLE PUSHBUTTON

CODE 74545

LIST OF PARTS

DESCRIPTION	MATERIAL	FINISH

DIMENSION SHEET FOR CAT. NO. SEE TABLE

REPAIRABLE ☐ NON-REPAIRABLE ☒

SYM	REVISIONS	APP	DATE
1	RELEASED FOR PRODUCTION PER DCN # 13193. JMN	JPP	8/21/06

THE DESIGN AND DIMENSIONS OF THE PRODUCT SHOWN ON THIS DRAWING ARE SUBJECT TO CHANGE WITHOUT NOTICE

TITLE
PUSHBUTTON SWITCH
SINGLE POLE, SINGLE THROW

TOLERANCES UNLESS OTHERWISE SPECIFIED
FRACTIONS ±1/64
DECIMALS ±.005
ANGLES ±2°

WIRING DEVICE-KELLEMS
HUBBELL INCORPORATED
BRIDGEPORT, CT

DR. BY JMN	APP. BY JPP
TR. BY	SCALE NONE
CHK'D BY JPP	DATE 8/21/06

B

M-10199

1