M-10217 1

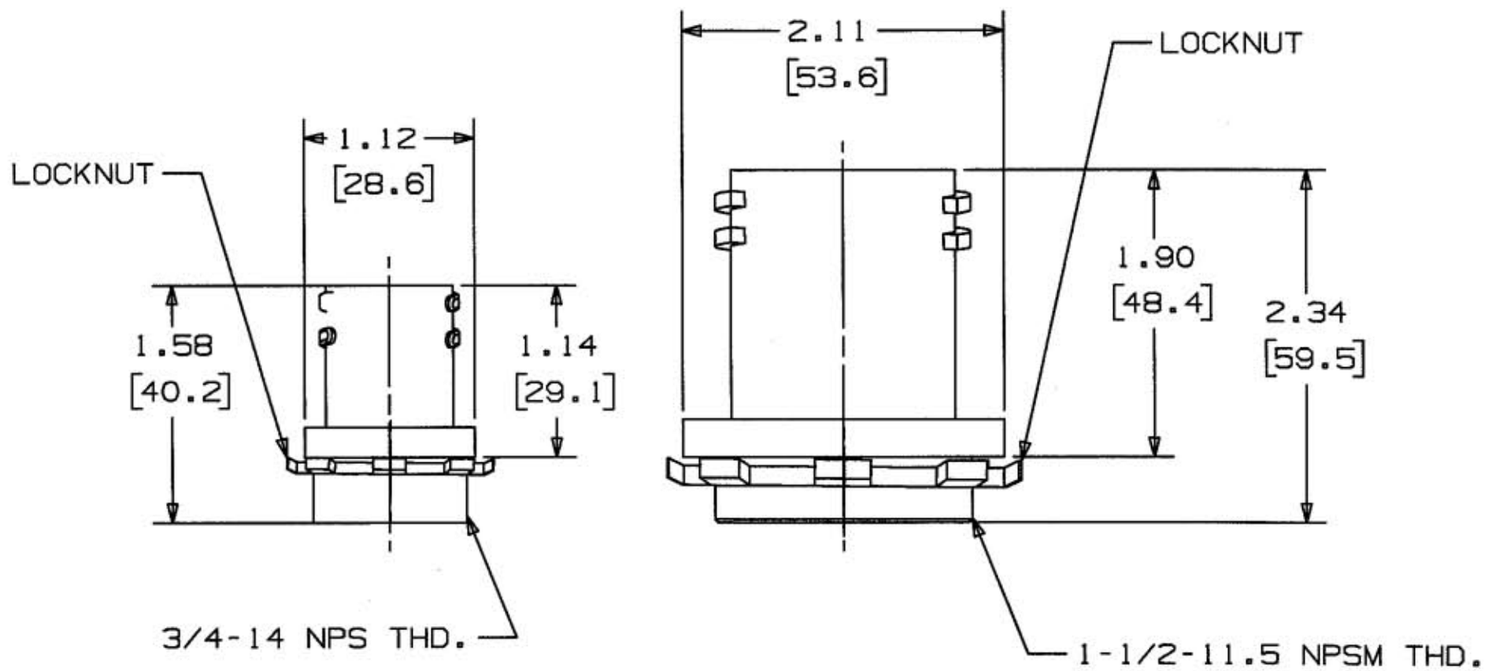

NOTES:

1. UL AND CSA LISTED.
2. FOR USE TO CONNECT FLEXIBLE METALLIC CONDUIT (FMC) TO STEEL OUTLET BOX OR OTHER METAL ENCLOSURE.
3. DIMENSIONS ARE IN INCHES [mm].

CODE 74545

LIST OF PARTS

DESCRIPTION	MATERIAL	FINISH
3/4" CONNECTOR	DIE CAST	
1-1/2" CONNECTOR	DIE CAST	
INSTRUCTION SHEET	POS2186	(NOT SHOWN)
PLASTIC BAG		(NOT SHOWN)
CARTON		(NOT SHOWN)

SYM	REVISIONS	APP	DATE
1	RELEASED PER DCN 13220	CAC	7-10-06

THE DESIGN AND DIMENSIONS OF THE PRODUCT SHOWN ON THIS DRAWING ARE SUBJECT TO CHANGE WITHOUT NOTICE

TITLE SYSTEM 1 FF CONDUIT SCREW-IN FITTINGS 3/4"& 1-1/2" TRADE SIZE

TOLERANCES UNLESS OTHERWISE SPECIFIED
FRACTIONS ±1/64
DECIMALS ±.005
ANGLES ±2°

WIRING DEVICE-KELLEMS
HUBBELL INCORPORATED
BRIDGEPORT, CT

DR. BY AMM | APP. BY CAC
TR. BY | SCALE 1:1
CHK'D BY CAC | DATE 6-21-06

DIMENSION SHEET FOR CAT. NO. S1FFCC

REPAIRABLE ☐ NON-REPAIRABLE ☒

B

M-10217

1